RINNOVA ADAPTIVE



User manual and installation instructions

CE

BIASI

WARNING

Congratulations on choosing this product.

Your modulating boiler is electronically adjusted and ignited.
- It is highly efficient
- It has a sealed chamber

Unlike traditional boilers, your condensing boiler makes it possible to recover energy by condensing the water vapour contained in the flue gas. This means that, with equal heat production, it **consumes less gas**, and the flue gas contains **fewer substances that are harmful** to the environment.
The materials used and the control systems offer safety, high levels of comfort and energy savings so you can appreciate the maximum advantages of autonomous heating.



IMPORTANT



✓ **The manual** must be read carefully to ensure rational and safe use of the boiler. It must be stored with care as it may be necessary to consult it in the future. If the unit is transferred to another owner, the manual must accompany the boiler.

✓ **The initial switch-on** must be carried out by an Authorised Service Centre. A list of these can be found at www.biasi.it/assistenza. The validity of the warranty starts from the date the product is purchased (see conditions listed on the specific certificate).

✓ **The manufacturer** declines all liability for translations of this manual from which incorrect interpretations may result. It cannot be considered responsible for failure to observe the instructions contained in this manual or the consequences of any actions that have not been specifically described.

DURING INSTALLATION

✓ After removing the packaging, make sure that the appliance **is not damaged**.
If damaged **do not install or start up** the appliance as it may be dangerous.
Contact your retailer or the nearest authorised service centre.

✓ **Installation** must be carried out by qualified personnel who are responsible for compliance with all applicable national and local laws and standards:
- the suitability of the installation site;
- the robustness of the wall intended for installation;
- the distance of the appliance from walls and surrounding objects;
- correct hook-up to the gas system;
- correct and safe set-up of the of air supply and combustion products evacuation system;
- correct hook-up to the electrical power supply and earth circuit;
- compliance with the technical specifications.

✓ **The boiler** is used to heat water to a temperature that is lower than boiling point, and must be connected to a heating system and/or a domestic hot water distribution network that is compatible with its performance and power.
The boiler must be supplied with **Methane gas (G20) or LPG (Propane G31)**.
The condensate discharge must be connected to the residential condensate outlet duct and it must be possible to inspect it (UNI 7129-5 and related standards).

The boiler must only be used for the purpose for which it was designed. Furthermore:

- It must not be exposed to atmospheric agents.
- The appliance can be used by children no younger than 8 years old, by people with physical, sensory or cognitive disabilities, and by people lacking experience or the necessary knowledge, provided that they are supervised or have received instructions on the safe use of the appliance and understand the inherent risks. Do not let children play with the appliance. Do not allow unsupervised children to perform user maintenance and cleaning.
- Prevent incorrect use of the boiler.
- Avoid making adjustments to the sealed devices.
- Avoid contact with hot parts during operation.

DURING USE

✓ **It is prohibited and dangerous** to obstruct, even partially, the air intakes for the ventilation of the room where the boiler is installed (UNI 7129-2 and related standards);

✓ **Repairs** must only be carried out by authorised service centres using original spare parts. Therefore, in the case of a problem, deactivate the boiler only (see instructions).

✓ **If you smell gas:**
- Do not turn on electric switches, the telephone or any other object that could create sparks.
- Immediately open up the doors and windows to create an air current that cleans the room.
- Close the gas cocks.
- Request the intervention of professionally qualified personnel.

✓ **Before starting the boiler**, have a qualified professional check that the gas supply system:
- Is perfectly sealed.
- Is the right size for the required flow rate to the boiler.
- Is equipped with the safety and control devices required by current standards;
- Make sure that the installer has connected the safety valve drain to a outlet funnel. The manufacturer is not responsible for damage caused by the water released when the safety valve opens, if it is not correctly connected to a drainage system.
- Make sure that the installer has connected the condensate siphon drain to a specific outlet funnel (UNI 7129-5 and related standards), which must be implemented in order to avoid the condensate freezing and ensure it is correctly drained.

✓ **Near the boiler:**
- there must be an all-pole disconnection switch to isolate the appliance from the electric power supply;
- a gas shut-off valve to interrupt the flow of fuel.

✓ **Do not touch the unit** with wet or damp body parts and/or in bare feet.

✓ **If performing structural work or maintenance** near the flue gas ducts and/or the flue gas exhaust devices or their accessories, turn off the unit and, when the work is complete, have a qualified technician check the efficiency.



DANGER: Instructions marked with this symbol must be observed to prevent mechanical or generic accidents (e.g. injuries or bruises).



DANGER: Instructions marked with this symbol must be observed to avoid electrical accidents (electrocution).



DANGER: Instructions marked with this symbol must be observed to avoid the risk of fire or explosions.



DANGER: Instructions marked with this symbol must be observed to avoid heat-related accidents (burns).



WARNING: Instructions marked with this symbol must be observed to avoid malfunctions and/or material damage to the unit or other items.



WARNING: Instructions marked with this symbol contain important information that must be read carefully.



WARNING: Risk of cutting / stabbing. Protective gloves must be worn.

Appliance category: II2H3P (gas G20 20 mbar, G31 37 mbar)
Destination country: JO

This unit is compliant with the following European Directives:
- Regulation (EU) 2016/426 on appliances burning gaseous fuels
- Boiler Efficiency Directive: Article 7(2) and Annex III of 92/42/EEC
- Electromagnetic Compatibility Directive 2014/30/EU
- Low Voltage Directive 2014/35/EU
- Directive 2009/125/EC Ecodesign requirements of energy-related products
- Regulation (EU) 2017/1369 Energy labelling
- Delegated regulation (EU) no. 811/2013
- Delegated regulation (EU) no. 813/2013
- Delegated regulation (EU) no. 814/2013 (where applicable)

In order to constantly improve its products, the manufacturer reserves the right to change the data provided in this documentation at any time and without notice.

This documentation is provided for information purposes and cannot be considered as a contract with third parties.

TABLE OF CONTENTS

1 BOILER DESCRIPTION 6
1.1 Assembly view 6
1.2 Shut-off valves and cocks 6
1.3 Control panel 7
1.4 General LCD characteristics 8

2 USER INSTRUCTIONS 12
2.1 Warnings 12
2.2 Ignition 12
2.3 Heating circuit temperature 13
2.4 Domestic hot water temperature 14
2.5 3 star preheating function 14
2.6 Shutdown 15

3 USEFUL TIPS 16
3.1 Filling the heating circuit 16
3.2 Heating 16
3.3 Antifreeze protection 16
3.4 Periodic maintenance 17
3.5 External cleaning 17
3.6 Operating anomalies 17
3.7 Displays in INFO mode 18
3.8 Remote fault code 19
3.9 Flue gas probe and thermal fuse 19

4 TECHNICAL SPECIFICATIONS 21
4.1 Assembly view 21
4.2 Schematic diagram 22
4.3 Wiring diagram 24
4.4 Hydraulic characteristics 25
4.5 Expansion vessel 25
4.6 Technical data M300V.2025 SM 26
4.7 Technical data M300V.3035 SM 29

5 INSTALLATION 32
5.1 Warnings 32
5.2 Precautions for installation 33
5.3 Installing the boiler bracket 33
5.4 Dimensions 34
5.5 Fittings 34
5.6 Boiler assembly 34
5.7 Installing the flue gas exhaust duct 35
5.8 Flue gas outlet dimensions and lengths 36
5.9 C63 exhaust-flue pipework 39
5.10 Positioning the draught terminals 40
5.11 Electrical connections 41
5.12 Connecting a room thermostat or zone valves 42
5.13 Installing the external temperature sensor 43
5.14 Electrical connection between the boiler and the external sensor 43
5.15 Selecting the type of external sensor 44
5.16 Electrical connection of the remote (optional) 45
5.17 Enabling operation with the external sensor and setting the K coefficient 45
5.18 Setting pump post-circulation 48
5.19 Selecting re-ignition frequency 49
5.20 Examples of hydraulic systems with hydraulic separator (optional) 50

6 PREPARATION FOR SERVICE 52
6.1 Warnings 52
6.2 Sequence of operations 52

7 CHECKING THE GAS SETTING 54
7.1 Warnings 54
7.2 Gas operations and setting 54
7.3 Automatic calibration of the gas valve 55

8 GAS CONVERSION 57
8.1 Warnings 57
8.2 Gas operations and setting 57

9 MAINTENANCE 59
9.1 Warnings 59
9.2 Programming the maintenance period 59
9.3 Removing the body panels 60
9.4 Reinstalling the body panels 61
9.5 Emptying the DHW circuit 61
9.6 Emptying the heating circuit 61
9.7 Cleaning the primary condensate exchanger and the burner 62
9.8 Check the pressure in the heating expansion tank 63
9.9 Cleaning the domestic hot water exchanger 63
9.10 Checking the flue gas expulsion duct 63
9.11 Checking boiler efficiency 63
9.12 Checking the condensate discharge siphon 64
9.13 Setting the boiler's chimney sweep function 64
9.14 Settings for changing the control board 66

10 BOILER DISPOSAL AND RECYCLING 70

Models	*Boiler certification code*
RINNOVA ADAPTIVE 25S	M300V.2025 SM
RINNOVA ADAPTIVE 35S	M300V.3035 SM

1 BOILER DESCRIPTION

1.1 Assembly view

The boiler model and serial number are printed on the warranty certificate.

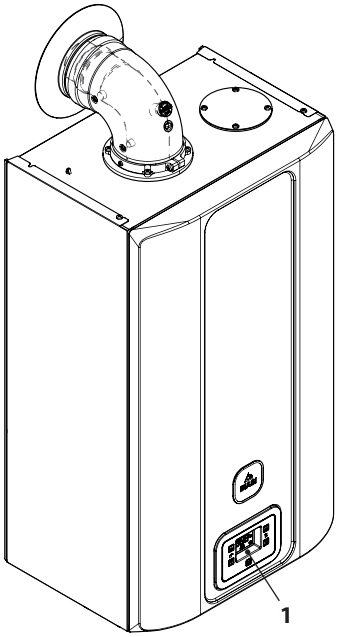

Figure 1.1

1 Control panel

1.2 Shut-off valves and cocks

Install a shut-off cock for the DHW inlet.

The figures in this manual only show one of the possible ways of installing cocks, pipes and fittings.

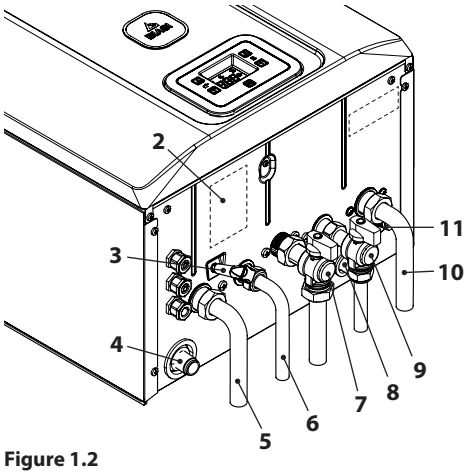

Figure 1.2

2 Gas supply label
3 Heating circuit filling cock
4 Condensate outlet pipe
5 Heating delivery pipe
6 Domestic hot water outlet pipe
7 Gas cock
8 Heating circuit safety valve discharge pipe
9 Domestic hot water inlet cock
10 Heating return pipe
11 Heating circuit drain cock

1.3 Control panel

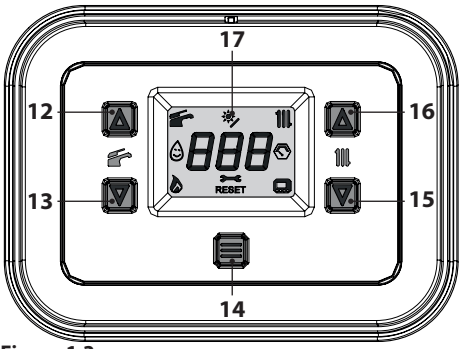

Figure 1.3

12 Domestic hot water temperature increase button
13 Domestic hot water temperature decrease button
14 Reset/Stand-by/Winter/Summer button
15 Heating temperature decrease button
16 Heating temperature increase button
17 LCD display

The RESET that restores all parameters to the factory settings occurs only by setting "parameter P30=04". When the reset is complete, this is shown by all the symbols on the display turning on.

1.4 General LCD characteristics

For the boiler technical specifications, consult the section "TECHNICAL SPECIFICATIONS" on page 21.

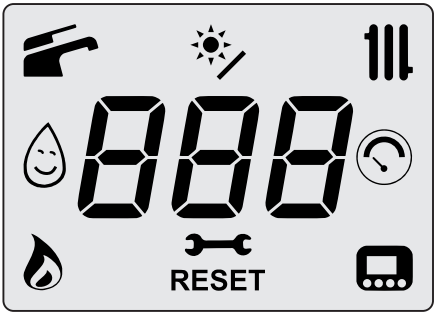

Figure 1.4

KEY

	All symbols with lines radiating from them indicate that the symbol is flashing.
	Stays on: DHW function enabled. Flashing: DHW function in progress.
	Constantly illuminated: solar control unit connected. Flashing: solar pump operating.
	Stays on: heating function enabled (winter). Flashing: heating function in progress.
	Constantly illuminated: 3 star preheating function active. Flashing: 3 star preheating function in progress.
	Stays on: for 15s only after system loading. Flashing: in the case of low system pressure or if viewing the pressure from the INFO menu.
	Stays on: flame present Flashing: drain upon ignition in progress.
	Stays on: maintenance due pre-warning. Flashing: maintenance required or maintenance due.
RESET	Stays on: lockout error. The boiler can be restarted by the user, by pressing the reset button.
	Stays on: remote control connected. Flashing: request from remote control in progress.

LCD SIGNALS

LCD	FUNCTION
E01 + RESET	Safety lockout due to failed ignition.
E02 + RESET	Lockout due to safety thermostat.
E03 + RESET	Generic lockout.
E04 +	Pump circulation failure, insufficient system pressure or water pressure sensor not connected.
E05 +	Control anomaly: fan.
E06 +	NTC heating delivery probe failure.
E07 +	DHW NTC probe failure / Hot water tank sensor failure.
E08 +	External NTC probe failure.
E10 +	Lockout due to tripping of the flue gas probe and thermal fuse.

BOILER DESCRIPTION

LCD	FUNCTION
E11 + RESET	Parasite flame.
E12 + 🔧	Return NTC probe failure.
E13 + 🔧	Delta T M-R > 40K.
E14 + RESET	Pump fault or primary temperature above 105°C.
E14 + 🔧	Temperature gradient circulation failure (>2K/s).
E18 + RESET	No ΔT heating at start-up.
E19 + 🔧	Auxiliary Input Probe Anomaly.
E20 + RESET	EVG lockout (valve piloting hardware failure).
E21 + RESET	EVG lockout (valve control Relay Failure).
E22 + RESET	EVG lockout (flame after closing valve Ref. EVG).
E23 + 🔧	Gas valve modulator disconnected.
E25 + RESET	Flame loss for more than 6 consecutive times.
E26 + 🔧	Maximum deviation fault between the 2 heating NTC probes.

LCD	FUNCTION
E42 + 🔧	Buttons fault.
E44 + RESET	Fault of cumulative gas valve timeout without flame.
E50 + 🔧	OT communication fault.
E62 + 🔧	Calibration request.
E89 + RESET	Internal error (usually hardware) or problems with the mains electrical supply (excessive distortion of waveform).
E91 + RESET	Maximum number of lockouts reached.
E96	Incorrect network frequency.
E97	Power supply voltage low.
E99	Card not configured.
L1	Primary limitation in DHW mode.
- - -	Boiler stand-by, the dashes light up in sequence to simulate a scrolling motion (antifreeze protection activated).
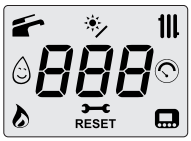	When powering ON the boiler, all icons and digits light up (for 2 seconds) to check operation of the LCD.
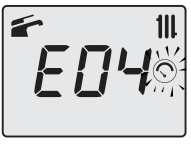	If the pressure is not correct the value is displayed with the flashing symbol.

LCD	FUNCTION
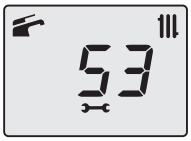	Next maintenance due date (factory setting 12 months). In the event of an error, this has greater priority than maintenance due date.
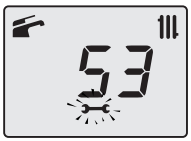	Maintenance overdue. In the event of an error, this has greater priority than maintenance due date.
 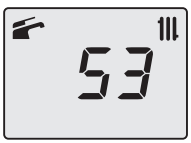	Pump active for the post-circulation phase (flashing **PO** + flashing temperature).
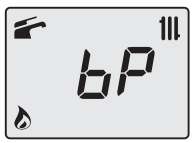 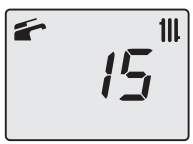	Boiler in antifreeze phase (flashing **bP** + flashing temperature).
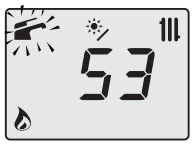	Boiler with DHW power request. The DHW temperature is displayed.
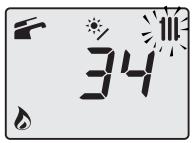	Boiler with central heating request via room thermostat.

LCD	FUNCTION
	Boiler with central heating power request with connected remote.
	Heating set temperature (all other symbols are disabled).
	DHW set temperature (all other symbols are disabled).
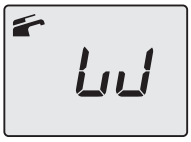 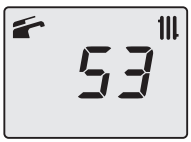	Delay burner ignition due to system setting (flashing **uu** + flashing temperature).
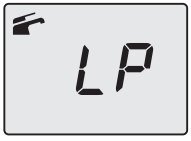 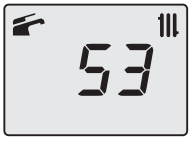	Boiler in chimney sweep function. To activate the chimney sweep function, set "parameter P32=1 ... 4". The following is displayed: LP = minimum DHW hP = minimum output in heating mode cP = maximum output in heating mode dP=maximum DHW. The transition occurs with buttons 16 (increase) and 13 (decrease) DHW temperature.

LCD	FUNCTION
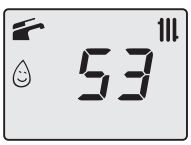	3 star preheating function active. When the symbol flashes, the function is in process.
	Constantly illuminated: solar control unit connected. When the symbol flashes, the solar circuit pump is in operation.

2 USER INSTRUCTIONS

2.1 Warnings

Check that the heating circuit is correctly filled with water, even if the boiler is only used for producing domestic hot water.

If it is not, proceed with filling; see section "Filling the heating circuit" on page 16.

All boilers have an antifreeze system that is activated if the temperature falls below 5°C; therefore **do not turn off the boiler**.

If the boiler is not used during cold periods, with the resulting risk of freezing, proceed as described in section "Antifreeze protection" on page 16.

2.2 Ignition

- The boiler cocks and the cocks used during installation must be open (Figure 2.1).

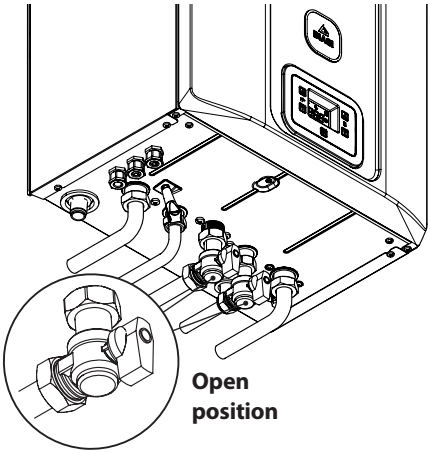

Figure 2.1

- Power the boiler by turning on the two-way switch fitted during installation. The LCD display shows the boiler status (last stored) Figure 2.2.

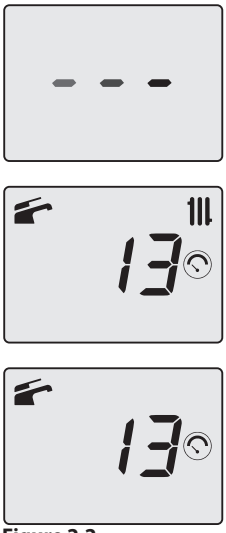

Stand-by
The dashes light up in sequence to simulate a scrolling motion

Winter

Summer

Figure 2.2

When the boiler is in Winter or Summer mode and there is no heat request, the display shows the pressure in the heating circuit (e.g. 1.3 bar in Figure 2.2).

Heating/DHW operation

- Press button 14 for 1 seconds until both symbols and appear on the display (Figure 2.3).

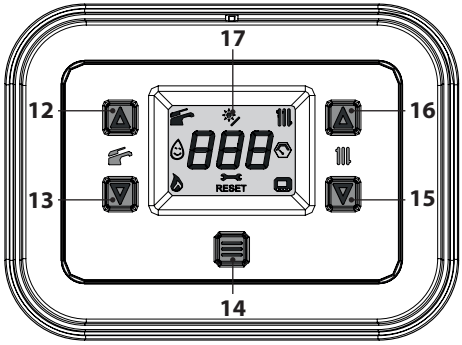

Figure 2.3

The LCD display shows the boiler temperature (primary circuit) and the symbols and (Figure 2.4).

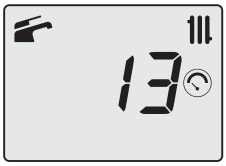

Figure 2.4

Operation with production of hot water only

- Press button 14 for 1 second until the symbol appears on the display (Figure 2.5).

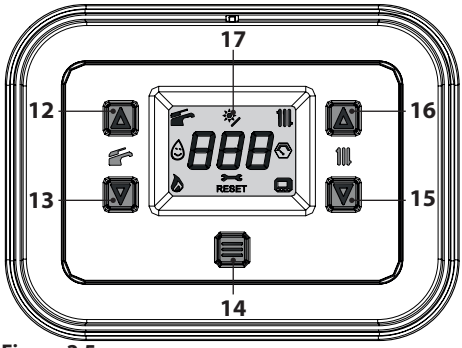

Figure 2.5

The LCD display shows the boiler temperature (primary circuit) and the symbol (Figure 2.6).

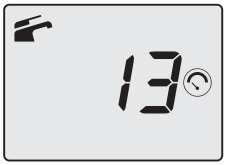

Figure 2.6

2.3 Heating circuit temperature

The heating delivery temperature of the hot water can be adjusted using the buttons 15 (decrease) and 16 (increase) (Figure 2.5) to between a minimum of approx. 25°C and a maximum of approx. 80°C. The first time one of those buttons is pressed, the "set" value is displayed. The second time it is pressed this can be changed.

Signal on the LCD display:

- the "set" value of the heating delivery hot water temperature and the symbol flash. The display background lights up (Figure 2.7).

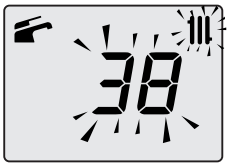

Figure 2.7

Adjusting the heating temperature based on the outdoor temperature (without external sensor)

Adjust the heating delivery hot water temperature as follows:

- between 25 and 35 with an external temperature between 5 and 15°C
- from 35 to 60 with an outdoor temperature of between -5°C and +5°C
- from 60 to 80 with an outdoor temperature of below -5°C.

Your qualified installer may suggest more suitable settings for your system.

The set temperature has been reached when the symbol is not visible on the LCD display.

Heating power demand

When the boiler receives a heating power request, the display shows the symbol followed by an increase in the heating delivery water temperature. The symbol flashes (Figure 2.8).

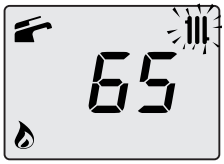

Figure 2.8

Adjusting the heating temperature with an external sensor installed

When the optional external sensor is installed, your boiler will automatically adjust the heating system's delivery water temperature according to the outdoor temperature.
In this case, the boiler must be set by a qualified installer (see "Enabling operation with the external sensor and setting the K coefficient" on page 45).
If the room temperature is not comfortable, you can increase or decrease the heating system delivery temperature by ± 15°C using the 15 (decrease) and 16 (increase) buttons (Figure 2.5).

2.4 Domestic hot water temperature

The domestic hot water temperature can be adjusted using the 12 (increase) and 13 (decrease) buttons (Figure 2.5) from a minimum of approx. 35°C to a maximum of approx. 60°C. The first time one of these two buttons is pressed, the "set" value is displayed. The second time it is pressed, the value can be changed.

Signal on the LCD display:

- the "set" value of the domestic hot water and the symbol flash. The display background lights up (Figure 2.7).

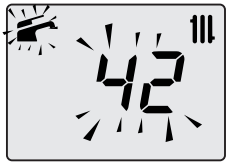

Figure 2.9

Adjustments

Adjust the temperature of the domestic hot water to a value that suits your needs.
Limit the need to mix hot water with cold water.
In this way, you can take full advantage of the automatic setting.
If the water is particularly hard, we recommend setting the boiler temperature to below 50°C.
In such cases, we recommend installing a water softener in the DHW system.
If the maximum flow rate of the domestic hot water is too high for a sufficient temperature to be reached, contact an authorised support technician to install a flow rate limiter.

Domestic hot water demand

When the boiler receives a request for domestic hot water, the display shows the symbol followed by an increase in the temperature of the domestic hot water. The symbol flashes (Figure 2.10).

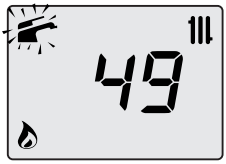

Figure 2.10

2.5 3 star preheating function

This function reduces consumption of the domestic hot water supply at the time of withdrawal, preparing the boiler temperature at the requested temperature.
To activate the 3 star preheating function press keys 12 and 13 together (Figure 2.12) until the symbol appears on the LCD display.
When the symbol flashes, the function is in process.

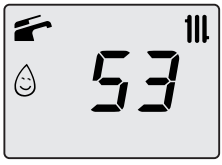

Figure 2.11

N.B.: should the power to the boiler fail, wait at least one minute before activating the function upon reactivation.

To disable the 3 star preheating function press keys 12 and 13 (Figure 2.12) until the symbol disappears from the LCD display.

2.6 Shutdown

Press button 14 (Figure 2.12) for 5 seconds until the symbol - - - appears on the display (the dashes light up in sequence to simulate a scrolling motion) (Figure 2.13).

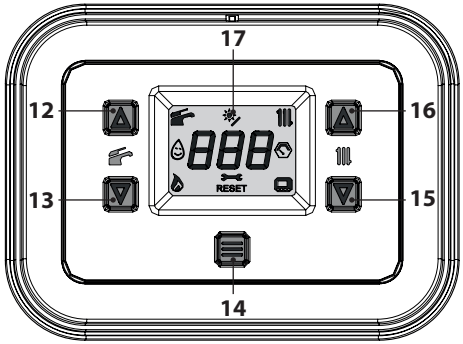

Figure 2.12

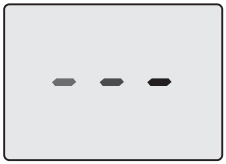

Figure 2.13

If the boiler will be inactive for a long period of time:

- Disconnect the boiler from the electric power supply;
- Close the boiler cocks Figure 2.14;

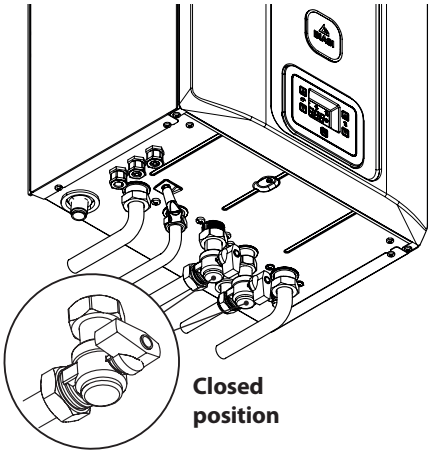

Figure 2.14

- If necessary, empty the hydraulic circuits (see section "Emptying the DHW circuit" on page 61 and section "Emptying the heating circuit" on page 61).

3 USEFUL TIPS

3.1 Filling the heating circuit

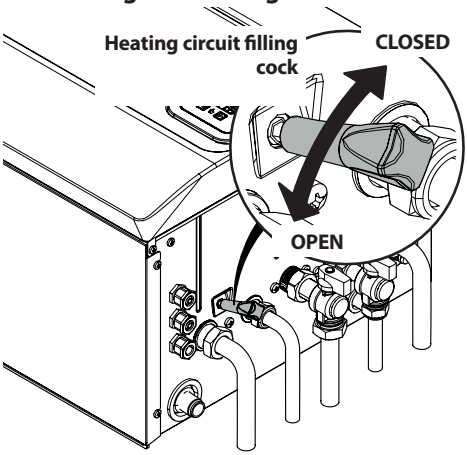

Figure 3.1

Press keys 15 and 16 at the same time to access the "INFO" menu (information).
The index value "**J00**" will be shown on the display in alternation with the pressure value "**13**" (1.3 bar). The number indicating the pressure is displayed without a decimal point, and the letter indicates the unit of measure (bar) (Figure 3.2).

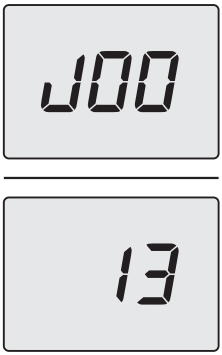

Figure 3.2

Open the filling cock in Figure 3.1 located under the boiler and at the same time check the heating circuit pressure on the display.
The pressure must be between 1 bar and 1.5 bar (e.g. 1.3 bar in Figure 3.2).
When the operation is complete, close the filling cock and bleed any air from the radiators.

3.2 Heating

For rational and economical service, have a room thermostat installed.
Never turn off the radiator in the room where the room thermostat is installed.
If a radiator (or convector) does not heat up, check if there is any air in the system and make sure that the cock is open.
If the room temperature is too high, do not adjust the radiator cocks but decrease the heating temperature setting using the room thermostat or the heating control buttons 15 and 16 (Figure 3.3).

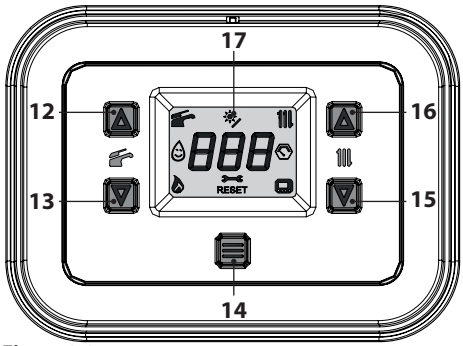

Figure 3.3

3.3 Antifreeze protection

The antifreeze system, and any additional protective devices, safeguard the boiler against possible damage due to freezing.
This system does not guarantee protection for the entire hydraulic system.
Where the outdoor temperature could fall below 0°C, it is recommended to leave the entire system on, setting the room thermostat to a low temperature.
The antifreeze function is active even if the boiler is in stand-by (Figure 3.4).

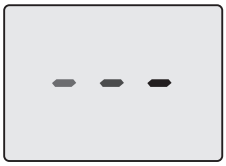

Figure 3.4

If the boiler is turned off, have a qualified technician empty the boiler (heating and DHW circuit) and empty the heating system and the DHW system.

3.4 Periodic maintenance

For efficient and regular boiler operation, it is recommended that the boiler be serviced and cleaned at least once a year by a technician from an authorised service centre.
During this check, the most important boiler components are inspected and cleaned. This check may be performed within the scope of a maintenance contract.

3.5 External cleaning

Before performing any cleaning operation, disconnect the boiler from the electric mains supply.

To clean, use a cloth soaked in soap and water. **Do not use**: Solvents, flammable substances or abrasive substances.

3.6 Operating anomalies

If the boiler is not operating and a code appears on the LCD display that is preceded by the letter "**E**" and the message **RESET** (see "General LCD characteristics" on page 8) the boiler is in lockout. The background of the display will flash (Figure 3.5).

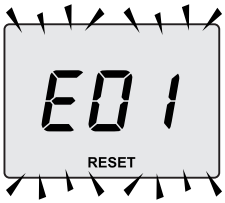

Figure 3.5

To restore operation, press the reset button 14 (Figure 3.3) on the boiler control panel.

Frequent safety lockouts should be reported to an authorised service centre.

After three reset attempts made by pressing the reset key 14 (Figure 3.3), code "**E91**" and the symbol (Figure 3.6) appear on the LCD display. The boiler is in lockout mode.



Figure 3.6

To restore boiler operation, disconnect the electrical power supply. Then, reconnect it and press buttons 12, 13 and 14 (Figure 3.3) on the boiler control panel at the same time for at least 5s.

Other possible anomalies shown on the LCD display

If the LCD display shows a code preceded by the letter **E** and the symbol the boiler has an anomaly that cannot be reset.
The background of the display will flash (Figure 3.7).



Figure 3.7

Another possible notification occurs when the DHW exchanger is not able to exchange all the power delivered by the boiler.
E.g. DHW exchanger blocked by lime scale. This occurs only when domestic hot water is requested from the boiler.

Code **L1** appears on the LCD display. The background of the display will flash (Figure 3.8).



Figure 3.8

To restore correct boiler operation, contact a technician from an authorised service centre.

Air bubble noises

Check the pressure of the heating circuit and fill it if necessary, see section "Filling the heating circuit" on page 16.

Low system pressure

Add more water to the heating system.
To do this, refer to section "Filling the heating circuit" on page 16.
The user is responsible for periodically checking the pressure of the heating system.
If water needs to be added too often, have the technical support centre check if there are any leaks in the heating system or the boiler itself.

Water leaks from the safety valve

Check if the filling cock is closed tightly (see "Filling the heating circuit" on page 16).
Check on the pressure gauge that the heating circuit pressure is not close to 3 bar. Should this be the case, drain a part of the water from the system through the air relief valves in the radiators in order to reduce the pressure to a normal value.

In the case of malfunctions other than those described above, shut down the boiler as described in section "Shutdown" on page 15 and call a technician from the authorised service centre.

3.7 Displays in INFO mode

INFO mode is used to view boiler status information. In the case of a boiler malfunction, provide this information to the service centre so that they can work out its causes.

To access the INFO mode, press keys 15 and 16 (Figure 3.9) together until the index "**J00**" is shown on the display in alteration with the parameter value (Figure 3.10).

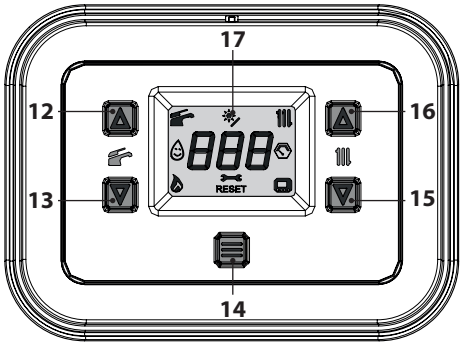

Figure 3.9

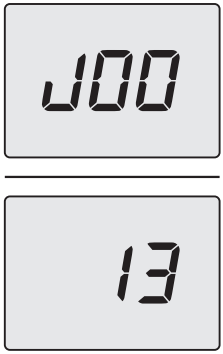

Figure 3.10

To scroll through the values, press the 13 key (previous INFO) and 15 key (next INFO).

To exit INFO mode, simply:
- wait 15 minutes without pressing any key;
- switch off the electric power supply;
- press and hold the 13 and 15 keys simultaneously for 5 seconds (Figure 3.9) (one level up).

The table summarises the possible values visible in INFO mode.

Value shown	Table of contents
Primary circuit pressure	J00 + value
Outdoor temperature	J01 + value
K curve value configured on site	J02 + value
Offset climatic curve value	J03 + value
Calculated heating set point (with climatic curve or set configured)	J04 + value
Delivery NTC temperature	J05 + value
Return NTC temperature	J06 + value
DHW set	J07 + value
DHW inlet temperature (if foreseen)	J08 + ---
DHW outlet temperature	J09 + value
DHW capacity	J10 + value
Flue gas temperature (if foreseen)	J11 + ---
Fan speed	J12 + value
Flue gas pressure transducer (if foreseen)	J13 + ---
Ionisation current value	J14 + value
Number of months to maintenance	J15 + value
3 star status (ON=01, OFF=00)	J16 + value
Modulation percentage	J17 + value
Pump modulation percentage	J18 + value
Delivery 2 temperature (if foreseen)	J19 + value
M.B. version	J20 + value
Main SW version	J21 + value

3.8 Remote fault code

If the optional remote is connected to the boiler, a code can be shown on the central part of the display that indicates a boiler anomaly.
The current anomaly is indicated by a numeric code followed by the letter **E**.
The anomaly codes sent to the remote are the same as those shown on the display (see "LCD SIGNALS" on page 8).

3.9 Flue gas probe and thermal fuse

Thermofuse tripping involves a safety lockout, and requires resetting by an Authorised Service Centre.

The flue gas probe and thermal fuse 18 indicated in Figure 3.11 are safety devices.
The flue gas probe and 18 are triggered when the flue gas temperature exceeds 110°C, activating the boiler safety lockout, shutting it off.
To reset normal boiler operation simply press the button 14 (Figure 3.9).

If the flue probe 18 does not trip and, therefore does not send the boiler into safety lockout, the thermal fuse 18 activates as a further measure to protect the flue gas outlet.

To restore the normal operation of the boiler, contact the Authorised Service Centre.

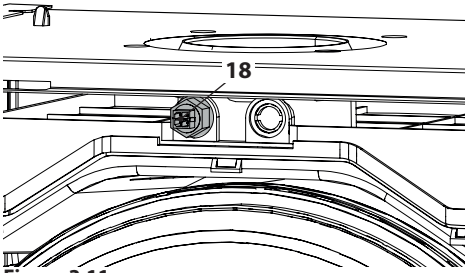

Figure 3.11

4 TECHNICAL SPECIFICATIONS

4.1 Assembly view

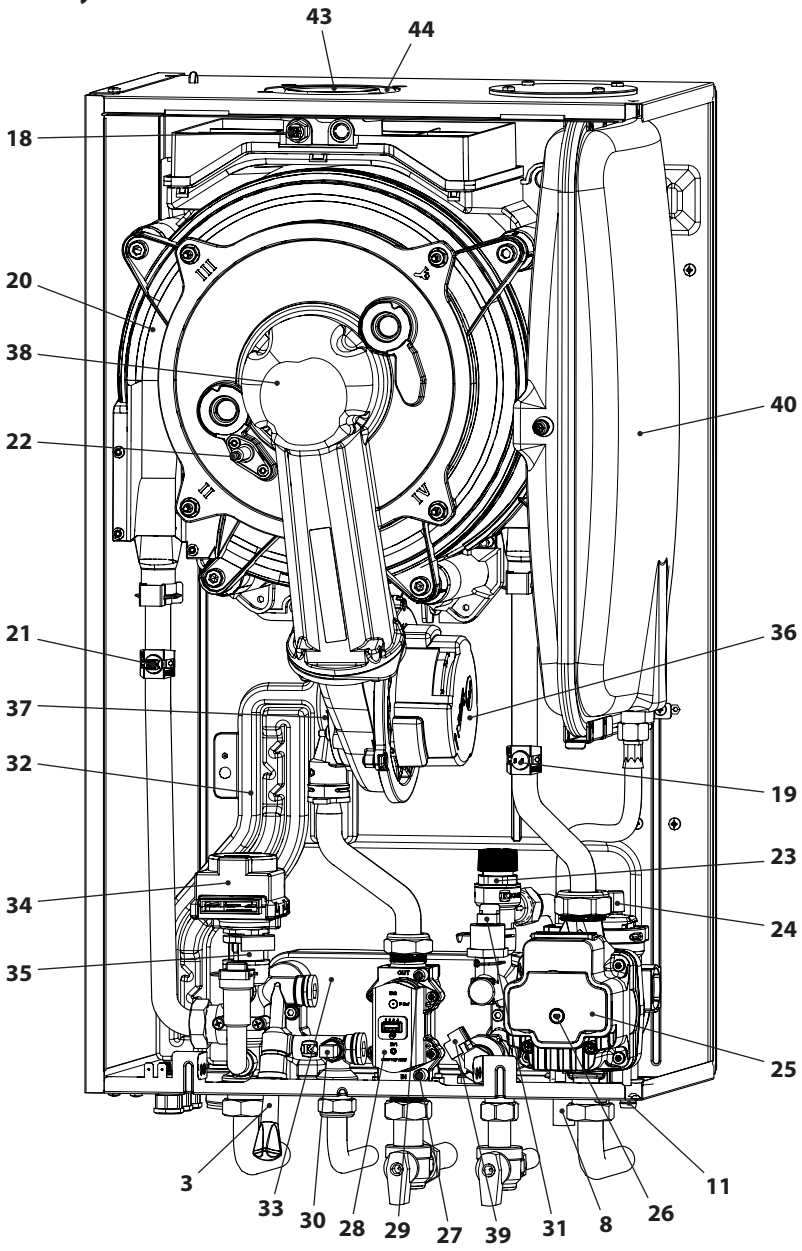

Figure 4.1

4.2 Schematic diagram

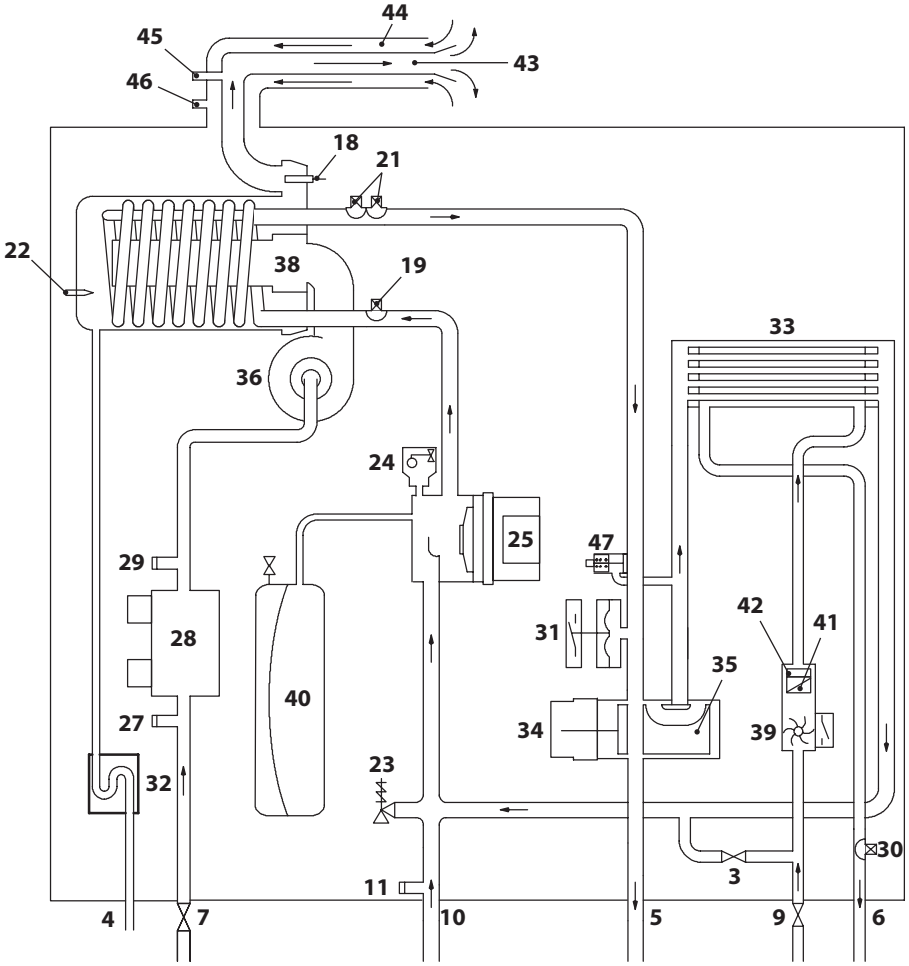

Figure 4.2

3 Heating circuit filling cock
4 Condensate outlet pipe
5 Heating delivery pipe
6 Domestic hot water outlet pipe
7 Gas cock
8 Heating circuit safety valve discharge pipe
9 Domestic hot water inlet cock
10 Heating return pipe
11 Heating circuit drain cock
18 Flue gas NTC probe and thermal fuse
19 Heating NTC return probe
20 Primary condensing exchanger
21 NTC heating delivery probe - NTC maximum temperature
22 Flame detection electrode/ignition electrode
23 3 bar safety valve
24 Automatic bleed valve

25 Pump
26 Pump bleed cap
27 Gas valve inlet tapping point
28 Gas valve
29 Gas valve outlet tapping point
30 DHW NTC probe
31 Heating transducer
32 Condensate discharge siphon
33 DHW exchanger
34 Three-way valve
35 Three-way valve plug
36 Fan
37 Air/gas mixer
38 Burner
39 DHW flowmeter
40 Expansion tank
41 Domestic hot water filter
42 DHW flow rate limiter (optional)
43 Flue gas exhaust duct
44 Air suction duct
45 Flue gas suction inlet
46 Air suction inlet
47 Integrated by-pass

* To access the *Data plate*, remove the front panel from the body as described in the *Maintenance* section.

4.3 Wiring diagram

1	Electrical power supply	**6**	Fan	**11**	Gas valve
2	Three-way valve	**7**	Flue gas probe and thermal fuse	**12**	External sensor terminal board
3	Pump	**8**	DHW flowmeter	**13**	Remote terminal board - Room thermostat
4	NTC heating return	**9**	DHW NTC	**14**	Ignition and detection electrodes
5	NTC heating delivery / NTC maximum temperature	**10**	Heating transducer		

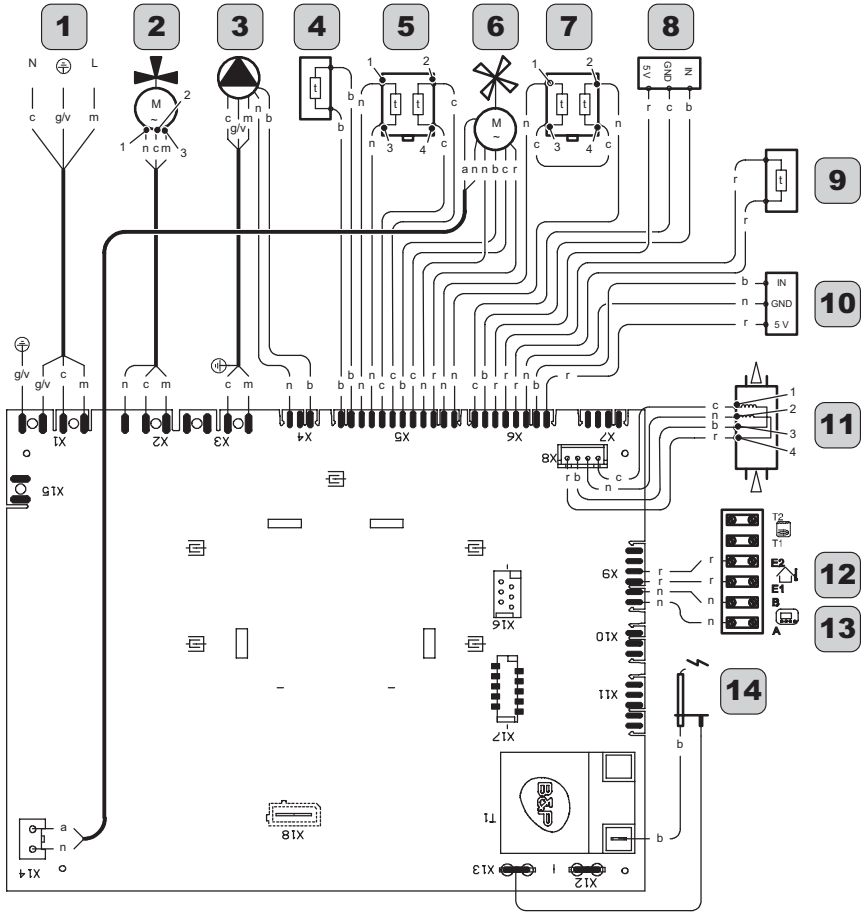

a	orange	**g**	yellow	**n**	black	**y/g**	yellow/green
b	white	**gr**	grey	**r**	red		
c	blue	**m**	brown	**v**	purple		

Figure 4.3

4.4 Hydraulic characteristics

The hydraulic characteristics represent the pressure (head) available in the heating system based on the flow rate.

Model **M300V.2025 SM**

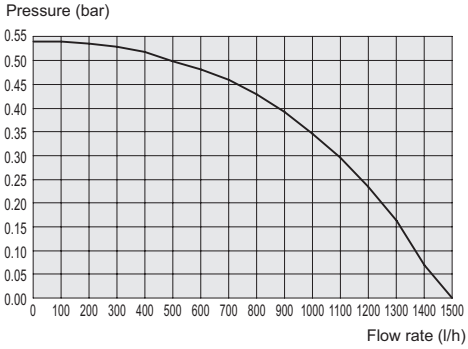

Figure 4.4

Model **M300V.3035 SM**

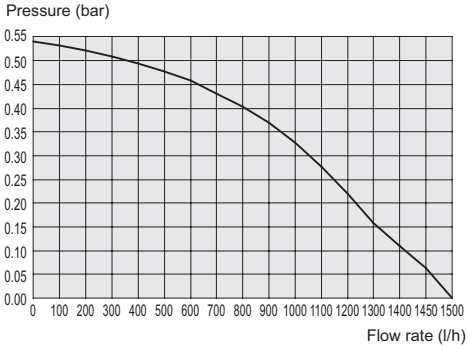

Figure 4.5

The load loss for the boiler has already been subtracted.

Flow rate with the thermostatic cocks closed

The boiler has an automatic by-pass, which protects the primary condensate exchanger.
If the circulation of water in the heating system decreases too much or totally stops due to the closure of thermostatic valves or circuit cocks, the by-pass guarantees a minimum circulation of water inside the primary condensate exchanger.
The by-pass is calibrated for a differential pressure of approx. 0.3-0.4 bar.

4.5 Expansion vessel

The difference in height between the safety valve and the highest point in the system can be max. 10 metres.
If differences are greater, increase the pre-load pressure of the expansion tank and the cold system by 0.1 bar for each 1 metre increase.

Total capacity	l	7.0
Pre-load pressure	kPa	100
	bar	1.0
Useful capacity	l	3.5
Maximum system content *	l	109

Figure 4.6

* In conditions of:
- Max. average system temperature of 85°C
- Initial temperature when filling the system 10°C.

For systems with contents that exceed the maximum system content (indicated in the table), a supplementary expansion tank must be installed.

4.6 Technical data M300V.2025 SM

(nom.Q.) Nominal heat input in heating mode (Hi)	kW	21,0
	kcal/h	18057
(nom.Q.) Nominal heat input in d.h.w. mode (Hi)	kW	26,0
	kcal/h	22356
(nom.Q.) Minimum heat input (Hi)	kW	3,0
	kcal/h	2580
* Max. heat input in heating mode 60°/80°C	kW	20,7
	kcal/h	17799
* Max. heat input in d.h.w. mode 60°/80°C	kW	25,6
	kcal/h	22012
* Min. heat input 60°/80°C	kW	2,8
	kcal/h	2408
** Max. heat input in heating mode 30°/50°C	kW	22,8
	kcal/h	19604
** Max. heat input in d.h.w. mode 30°/50°C	kW	28,2
	kcal/h	24248
** Min. heat input 30°/50°C	kW	3,2
	kcal/h	2752

Data in heating mode		
NOx class		6
Weighted NOx ***	mg/kWh	44
	ppm	25
Weighted CO EN483 (0% O2)	ppm	n.a.
CO at nom. Q. (0% O2) ***	ppm	220,0
CO at nom. Q. (0% O2) ***	ppm	2,0
CO2 at nom. Q. with G20	%	8,5 - 9,5
CO2 at min. Q. with G20	%	8,5 - 9,5
CO2 at nom. Q. with G31	%	9,6 - 10,6
CO2 at min. Q. with G31	%	9,5 - 10,5
** Condensate quantity at nom.Q. 30°/50°C	l/h	4,2
** Condensate quantity at min.Q. 30°/50°C	l/h	0,5
Condensate pH	pH	4,0

Data in d.h.w. mode		
CO2 at nom. Q. with G20	%	8,5 - 9,5
CO2 at min. Q. with G20	%	8,5 - 9,5
CO2 at nom. Q. with G31	%	9,6 - 10,6
CO2 at min. Q. with G31	%	9,5 - 10,5

* With return water temperature that does not permit condensation

** With return water temperature that does permits condensation

*** With coax. flue gas discharge 60/100 0.9 m and METHANE gas G20

Measured efficiency in heating mode		
* Nominal efficiency 60°/80°C	%	98,4
* Min. efficiency 60°/80 C	%	94,0
** Nominal efficiency 30°/50°C	%	108,6
** Min. efficiency 30°/50°C	%	105,2
* Efficiency At 30 % of load	%	n.a.
** Efficiency At 30 % of load	%	109,8
Heat loss at the chimney with burner operating	Pf (%)	1,3
Heat loss at the chimney with burner off ΔT 50°C	Pfbs (%)	0,2
Heat loss towards the environment through the casing with the burner operating	Pd (%)	0,3
Energy efficiency		* * * *

Gas supply pressures			
Gas		Pa	mbar
Methane G20	**Nom.**	2000	20
	Min.	1700	17
	Max.	2500	25
Propane G31	**Nom.**	3700	37
	Min.	2500	25
	Max.	4500	45

TECHNICAL SPECIFICATIONS

Gas rate maximum - central heating		
Methane G20	m^3/h	2,22
Propane G31	kg/h	1,63
Gas rate maximum - domestic hot water		
Methane G20	m^3/h	2,75
Propane G31	kg/h	2,02
Gas rate minimum - ch dhw		
Methane G20	m^3/h	0,32
Propane G31	kg/h	0,23

Heating		
Adjustable temperature *	°C	25 - 80
Max. operating temp.	°C	90
Maximum pressure	kPa	300
	bar	3,0
Minimum pressure	kPa	30
	bar	0,3
Available pressure difference (at 1000 l/h)	kPa	34,0
	bar	0,340

** At minimum useful power*

Domestic hot water		
Temp. Minimum-Maximum	°C	35 - 55
Maximum pressure	kPa	1000
	bar	10
Minimum pressure	kPa	30
	bar	0,3
Maximum flow rate		
(ΔT=25 K)	l/min	15,4
(ΔT=35 K)	l/min	10,7
Minimum flow rate	l/min	2,5
Specific d.h.w. flow rate (ΔT=30 K) *	l/min	12,8

** Reference standard EN 625*

Chimney design #		
Max. flue gas temperature at 60°/80°C	°C	78
Max. flue gas temperature at 30°/50°C	°C	38
Max. flue gas mass flow rate	kg/s	0,0121
Min. flue gas mass flow rate	kg/s	0,0014
Max. air mass flow rate	kg/s	0,0116
Min. air mass flow rate	kg/s	0,0013

 # Values refer to tests with 80 mm 1 + 1 twin pipe discharge Methane gas G20 and heat input in d.h.w. mode

Electrical data		
Voltage	V	230
Frequency	Hz	50
Output at nominal heat input	W	100
Output at minimum heat input	W	n.a.
Output in stand-by	W	3
Degree of protection		IPX5D

Other characteristics		
Height	mm	700
Width	mm	400
Depth	mm	300
Weight	kg	31,5
Water content in boiler	dm^3	2
Min. ambient temperature	°C	n.a.
Max. ambient temperature	°C	n.a.

TECHNICAL SPECIFICATIONS

Flue gas discharges		
Boiler type		
B23P C13 C33 C43 C53 C63 C83 C93		
Coaxial air/flue gas duct Ø	mm	60/100
Twin pipe air/flue gas duct Ø	mm	80/80
Coaxial air/flue gas duct to roof Ø	mm	80/125

G20 Hi. 34.02 MJ/m3 (15°C, 1013.25 mbar)

G31 Hi. 46.34 MJ/kg (15°C, 1013.25 mbar)

1 mbar corresponds to approx. 10 mm H20

(2362)

4.7 Technical data M300V.3035 SM

(nom.Q.) Nominal heat input in heating mode (Hi)	kW	31,0
	kcal/h	26655
(nom.Q.) Nominal heat input in d.h.w. mode (Hi)	kW	34,7
	kcal/h	29837
(nom.Q.) Minimum heat input (Hi)	kW	3,8
	kcal/h	3267
* Max. heat input in heating mode 60°/80°C	kW	30,6
	kcal/h	26311
* Max. heat input in d.h.w. mode 60°/80°C	kW	34,1
	kcal/h	29321
* Min. heat input 60°/80°C	kW	3,6
	kcal/h	3095
** Max. heat input in heating mode 30°/50°C	kW	33,6
	kcal/h	28891
** Max. heat input in d.h.w. mode 30°/50°C	kW	37,7
	kcal/h	32416
** Min. heat input 30°/50°C	kW	4,0
	kcal/h	3439

Data in heating mode		
NOx class		6
Weighted NOx ***	mg/kWh	28
	ppm	16
Weighted CO EN483 (0% O2)	ppm	n.a.
CO at nom. Q. (0% O2) ***	ppm	200,0
CO at nom. Q. (0% O2) ***	ppm	5,0
CO2 at nom. Q. with G20	%	8,5 - 9,5
CO2 at min. Q. with G20	%	8,5 - 9,5
CO2 at nom. Q. with G31	%	9,6 - 10,6
CO2 at min. Q. with G31	%	9,5 - 10,5
** Condensate quantity at nom.Q. 30°/50°C	l/h	5,6
** Condensate quantity at min.Q. 30°/50°C	l/h	0,6
Condensate pH	pH	4,0

Data in d.h.w. mode		
CO2 at nom. Q. with G20	%	8,5 - 9,5
CO2 at min. Q. with G20	%	8,5 - 9,5
CO2 at nom. Q. with G31	%	9,6 - 10,6
CO2 at min. Q. with G31	%	9,5 - 10,5

* With return water temperature that does not permit condensation

** With return water temperature that does permits condensation

*** With coax. flue gas discharge 60/100 0.9 m and METHANE gas G20

Measured efficiency in heating mode		
* Nominal efficiency 60°/80°C	%	98,8
* Min. efficiency 60°/80 C	%	94,5
** Nominal efficiency 30°/50°C	%	108,5
** Min. efficiency 30°/50°C	%	105,8
* Efficiency At 30 % of load	%	n.a.
** Efficiency At 30 % of load	%	109,9
Heat loss at the chimney with burner operating	Pf (%)	1
Heat loss at the chimney with burner off ΔT 50°C	Pfbs (%)	0,2
Heat loss towards the environment through the casing with the burner operating	Pd (%)	0,2
Energy efficiency		* * * *

Gas supply pressures			
Gas		Pa	mbar
Methane G20	**Nom.**	2000	20
	Min.	1700	17
	Max.	2500	25
Propane G31	**Nom.**	3700	37
	Min.	2500	25
	Max.	4500	45

TECHNICAL SPECIFICATIONS

Gas rate maximum - central heating		
Methane G20	m^3/h	3,28
Propane G31	kg/h	2,41
Gas rate maximum - domestic hot water		
Methane G20	m^3/h	3,67
Propane G31	kg/h	2,70
Gas rate minimum - ch dhw		
Methane G20	m^3/h	0,40
Propane G31	kg/h	0,30

Heating		
Adjustable temperature *	°C	25 - 80
Max. operating temp.	°C	90
Maximum pressure	kPa	300
	bar	3,0
Minimum pressure	kPa	30
	bar	0,3
Available pressure difference (at 1000 l/h)	kPa	32,0
	bar	0,320

** At minimum useful power*

Domestic hot water		
Temp. Minimum-Maximum	°C	35 - 55
Maximum pressure	kPa	1000
	bar	10
Minimum pressure	kPa	30
	bar	0,3
Maximum flow rate		
(ΔT=25 K)	l/min	20,5
(ΔT=35 K)	l/min	14,3
Minimum flow rate	l/min	2,5
Specific d.h.w. flow rate (ΔT=30 K) *	l/min	17,0

** Reference standard EN 625*

Chimney design #		
Max. flue gas temperature at 60°/80°C	°C	78
Max. flue gas temperature at 30°/50°C	°C	50
Max. flue gas mass flow rate	kg/s	0,0209
Min. flue gas mass flow rate	kg/s	0,0044
Max. air mass flow rate	kg/s	0,0203
Min. air mass flow rate	kg/s	0,0044

 # Values refer to tests with 80 mm 1 + 1 twin pipe discharge Methane gas G20 and heat input in d.h.w. mode

Electrical data		
Voltage	V	230
Frequency	Hz	50
Output at nominal heat input	W	116
Output at minimum heat input	W	n.a.
Output in stand-by	W	3
Degree of protection		IPX5D

Other characteristics		
Height	mm	700
Width	mm	400
Depth	mm	300
Weight	kg	36
Water content in boiler	dm^3	2
Min. ambient temperature	°C	n.a.
Max. ambient temperature	°C	n.a.

TECHNICAL SPECIFICATIONS

Flue gas discharges		
Boiler type		
B23P C13 C33 C43 C53 C63 C83 C93		
Coaxial air/flue gas duct Ø	mm	60/100
Twin pipe air/flue gas duct Ø	mm	80/80
Coaxial air/flue gas duct to roof Ø	mm	80/125

G20 Hi. 34.02 MJ/m3 (15°C, 1013.25 mbar)

G31 Hi. 46.34 MJ/kg (15°C, 1013.25 mbar)

1 mbar corresponds to approx. 10 mm H20

(2363)

5 INSTALLATION

5.1 Warnings



Protective gloves must be worn.

The appliance must be installed by a specialist installer in compliance with current applicable standards such as: UNI 7129 2015 part 1-2-3-4-5 and related standards.

The unit must discharge the combustion products directly outside or into a suitable exhaust flue designed for that purpose and in compliance with current national and local standards.
The unit is not suitable for receiving condensate from the combustion product evacuation system.

The combustion air must not contain chlorine, ammonia or alkaline agents.
Installing a boiler near to a swimming pool, washing machine or laundry room results in an aggressive mixture in the combustion air around the boiler.

Before installation, it is **mandatory** to thoroughly wash all of the system pipes with non-aggressive chemical products. The purpose of this procedure is to remove any residues or impurities that could jeopardise good boiler operation.
After washing, the system must be treated.
The conventional warranty does not cover any problems resulting from failure to follow these instructions.

Check:
- That the boiler is suitable for the type of gas distributed (check adhesive label).
  If it is necessary to convert the boiler to a different type of gas, see section "GAS CONVERSION" on page 57.
- That the characteristics of the electric, water and gas supply networks comply with those on the plate.

The combustion products may only be discharged using the flue gas exhaust kits provided by the manufacturer, as they are an integral part of the boiler.

For LPG gas (Propane G31), the installation must also comply with the requirements of the distributing companies and with the requirements of current technical standards and laws.

The safety valve must be connected to a suitable discharge duct to avoid flooding if it is triggered.

The condensate outlet siphon must be connected to the residential condensate outlet duct; it must be possible to inspect it and it must be implemented in such a way as to avoid the condensate freezing (UNI 7129-5 and related standards).

The electric installation must comply with technical standards, in particular:
- It is **mandatory** to connect the boiler to an effective earthing system via a specific terminal.
- A multiway switch must be installed near the boiler to allow complete disconnection in conditions of category III over-voltage. For the electrical connections, refer to section "Electrical connections" on page 41.
- **The electric conductors for connecting the remote control to the boiler** must go through different channels than those for the mains voltage (230 V), as they are supplied with low safety voltage.



If the power supply cable is damaged, it must only be replaced by a qualified technician.

5.2 Precautions for installation

Follow these installation instructions:

- Mount the boiler on a strong wall.
- Respect the measurements of the flue gas evacuation duct (provided in section "Flue gas outlet dimensions and lengths" on page 36) and the correct systems for installing the duct shown in the instruction sheet provided together with the flue gas evacuation pipe kit.
- Leave the minimum distances indicated in Figure 5.1 around the unit.

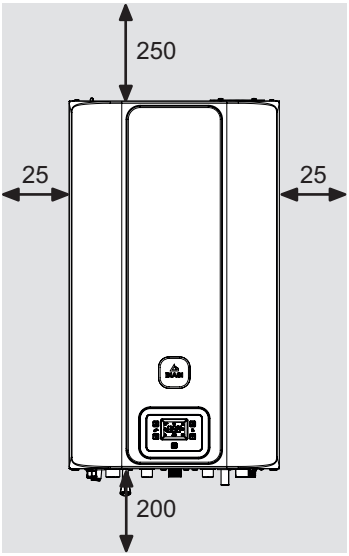

All measurements are in mm

Figure 5.1

- Leave 5 cm of free space in front of the boiler if it is inserted in a cabinet, shelter or niche.
- In the case of an old heating system, before installing the boiler, carefully clean it in order to remove any sludgy deposits that have formed over time.
- We recommended installing a purification filter in the system or using a product that conditions the circulating water.
  This latter solution, in particular, not only cleans the system but also provides anti-corrosion protection by forming a protective film on the metal surfaces and neutralising the gases in the water.

Filling the central heating system:

- If the boiler is installed in rooms where the ambient temperature could fall below 0°C, it is recommended to take the proper precautions in order to prevent damaging the boiler.
- Do not add antifreeze or anticorrosion products to the heating water in the wrong concentrations or use those with chemical/physical characteristics that are incompatible with the boiler's hydraulic components.

The manufacturer does not assume any liability for this type of damage.

Inform the user about the boiler's anti-freeze function and any chemical products added to the heating system.

5.3 Installing the boiler bracket

The boiler is provided with a bracket for assembly.
A paper template that contains all the measurements and information for correctly installing the support is provided.
The hydraulic and gas system must terminate with female fittings, 3/4" for the gas fitting and for the heating delivery and return, and 1/2" for the DHW inlet and outlet, or with welded copper pipes with, respectively, 18 mm ø and 14 mm ø.
For measurements and useful data see section "Dimensions" on page 34, "Fittings" page 34, "Flue gas outlet dimensions and lengths" page 36.

5.4 Dimensions

The boiler complies with the following dimensions:

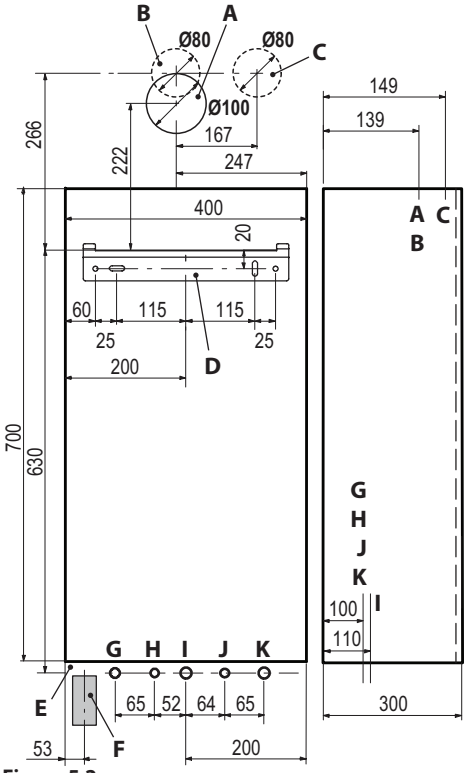

Figure 5.2

- **A** Flue gas exhaust / air suction (coaxial Ø 100/60)
- **B** Flue gas exhaust (Ø 80 twin pipe)
- **C** Air suction (Ø 80 twin pipe)
- **D** Boiler mounting bracket
- **E** Area for positioning the electric connection channels
- **F** Area for positioning the condensate outlet pipe
- **G** MR - Heating delivery
- **H** US - DHW output
- **I** Gas
- **J** ES - DHW inlet
- **K** RR - Heating return

5.5 Fittings

The boiler uses the following fittings:

	Cock	Pipe ø
MR		Ø 16/18
US		Ø 12/14
Gas	G 3/4 MF	Ø 16/18
ES	G 1/2 MF	Ø 12/14
RR		Ø 16/18
G1/2F 3 bar safety valve fitting		

Condensate discharge to be implemented with pipe min. ø 30 mm

5.6 Boiler assembly

- Remove the protective caps from the boiler pipes.
- Hook the boiler onto the bracket.
- Screw the cock on the boiler.
- Fix or weld the flared stub pipes, respectively Ø 14 mm for the DHW inlet and outlet, and Ø 18 mm for the hydraulic system return, delivery and gas.

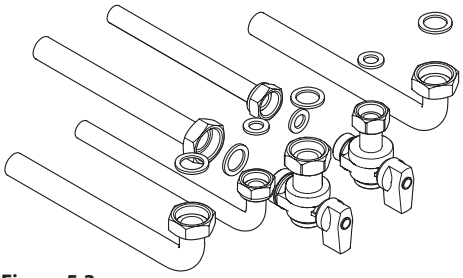

Figure 5.3

- Install a shut-off cock on the DHW inlet. The purpose of the cock is to hydraulically isolate the unit, making normal maintenance possible.

- If the hydraulic heating system is higher than the boiler surface, cocks should be installed in order to disconnect the system for maintenance purposes.
- Block the pipes by placing 1/2" and 3/4" gaskets between the boiler fittings.

- Carry out a leakage test for the gas supply system.
- Connect the safety valve discharge 8 (Figure 5.4) to an outlet funnel.

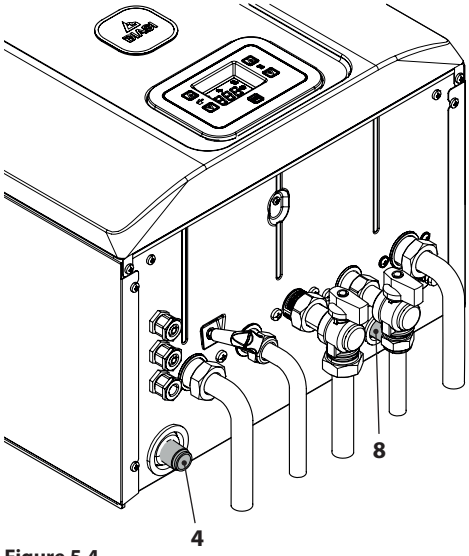

Figure 5.4

- Insert the flexible condensate discharge pipe 4 (Figure 5.4) inside the residential condensate discharge duct or the discharge funnel of the safety valve if the discharge is suitable for receiving acid condensate.

5.7 Installing the flue gas exhaust duct

Consult the sheet provided together with the preselected kit for information on how to correctly install the flue gas duct.
The horizontal sections of the flue gas pipes must have a slope of approx. 1.5 degrees (25 mm per metre), therefore the terminal must be higher than the boiler side opening.
Only the coaxial pipe with the terminal must be horizontal as the discharge pipe has already been implemented with the correct slope.

CORRECT implementation of a wall-mounted concentric discharge system

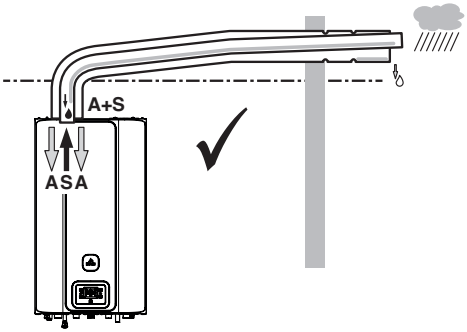

Figure 5.5
A = air suction
S = flue gas outlet

CORRECT implementation of twin flue gas outlet/air suction systems

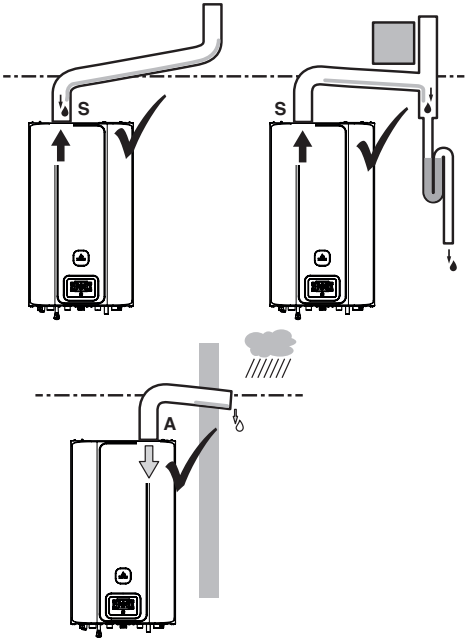

Figure 5.6
A = air suction
S = flue gas outlet

INCORRECT implementation of twin flue gas outlet/air suction systems

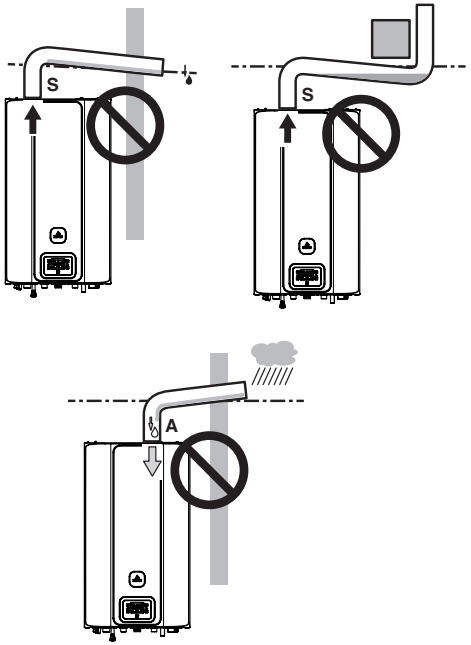

Figure 5.7
A = air suction
S = flue gas outlet

5.8 Flue gas outlet dimensions and lengths

The flue gas outlet/air suction can be set up in the following ways:
C_{13} C_{33} C_{43} C_{53} C_{63} C_{83} C_{93} B_{23P}

Consult the sheet provided with the selected kit which is packaged separately.
The horizontal sections of the flue gas pipes must have a slope of approx. 1.5 degrees (25 mm per metre).

The terminal must be higher than the boiler side opening.

Only the coaxial pipe with the terminal must be horizontal as the discharge pipe has already been implemented with the correct slope.

The following kits are available for connection to the boiler:

Wall-mounted flue gas outlet kit (Figure 5.8 A)

Coaxial duct Ø 60/100 mm (A)	
Nominal length	0.915 m
Minimum length	0.5 m
Maximum length	10 m

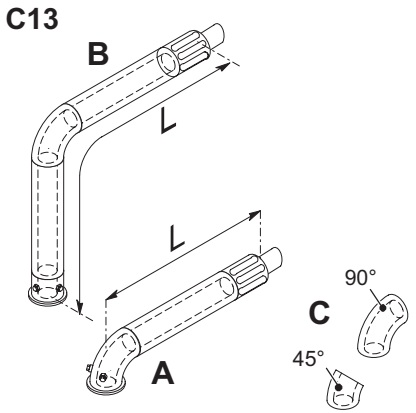

Figure 5.8

Vertical flue gas outlet kit with 90° elbow (Figure 5.8 B)
This kit is used to raise the outlet axis of the boiler by 635 mm.
The terminal must always discharge horizontally.

Coaxial duct Ø 60/100 with 90° elbow (B)	
Nominal length	1.55 m
Minimum length	0.5 m
Maximum length	10 m

Supplementary 45° or 90° elbows (Figure 5.8 C)
Coaxial elbows Ø 60/100 mm.
When these elbows are used in the duct, they reduce the maximum length of the flue gas duct by:

For a 45° elbow loss	0.5 m
For a 90° elbow loss	1 m

Twin pipe suction discharge duct kit Ø 80 mm - (Figure 5.9) - (Figure 5.10)

This kit is used to separate the flue gas outlet from the air suction. The terminals can be inserted in exhaust flues designed for this purpose, or discharge flue gas or intake air directly on the wall.

Twin ducts Ø 80	
Minimum length	0.5 m
Maximum length	40 m

N.B.: The terminals of the air suction and flue gas exhaust pipes must not be positioned on opposite walls of the building (EN 483).

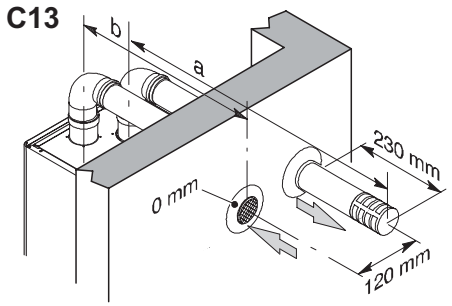

Figure 5.9

Also Ø 80 mm 90° and 45° elbows are available that reduce the total max. length of the ducts:

For a 45° elbow loss	0.9 m
For a 90° elbow loss	1.65 m

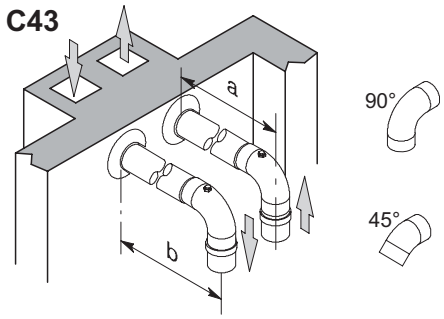

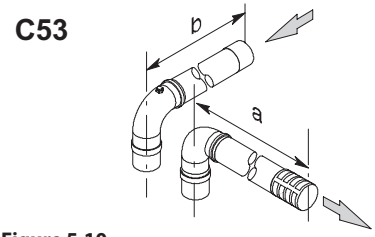

Figure 5.10

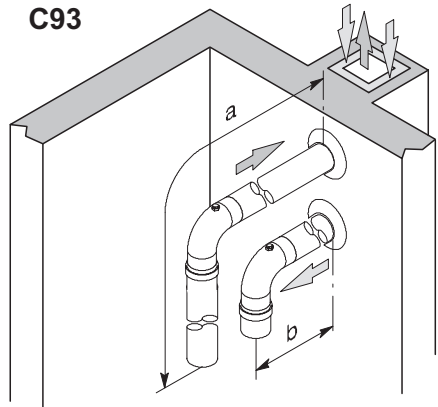

Figure 5.11

TYPE C_{63}

If using ducts and terminals from another manufacturer (type C_{63}), these must be approved and, in the case of a flue gas duct, materials must be used that comply with the condensation products.

When dimensioning the ducts, take into ac-

count the residual pressure difference at the fan:

Useful static pressure at nominal heat input	**25 kW**	270	Pa
	35 kW	190	Pa
Overheated flue	**25 kW**	92	°C
	35 kW	96	°C
Maximum recirculation of CO2 in the suction duct	**25 kW**	1,20	%
	35 kW	1,40	%

TYPE C_{83} (Figure 5.12)

The boiler with this type of outlet installed must take the comburent air from the outside and discharge the flue gas in the individual or collective chimney designed for this purpose.

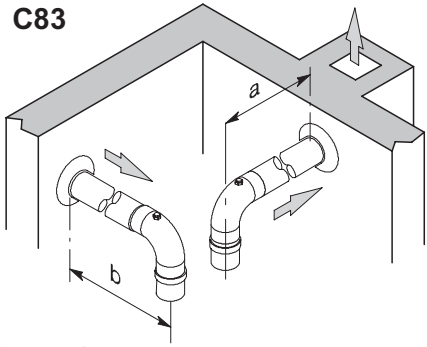

Figure 5.12

Roof-mounted flue gas outlet kit (Figure 5.13)

This kit makes it possible to release the flue gases directly through the roof.

Coaxial duct Ø 80/125 mm	
Nominal length	0.96 m
Maximum length	12 m

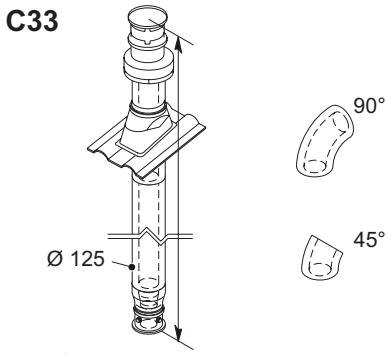

Figure 5.13

Extensions are available for reaching the maximum height.

Coaxial Ø 80/125 mm 90° and 45° elbows are available that reduce the total max. length of the ducts by:

For a 45° elbow loss	0.5 m
For a 90° elbow loss	1 m

TYPE B_{23P} (Figure 5.14)

This type of flue gas outlet extracts the necessary combustion air from the same room as the boiler is installed in; the combustion products must be released outside and the outlet pipe can be through the wall or a chimney.

TYPE B_{23P} duct	
Minimum length	0.5 m
Maximum length (A + B)	40 m

There must be a suitable air intake in the room where the boiler is installed for the supply of combustion air and for room ventilation.

For proper operation, the minimum necessary air exchange must be 2 m^3/h for each kW of heat input.

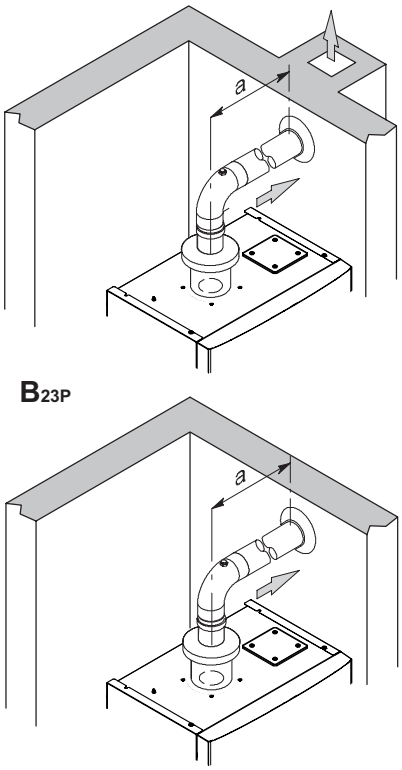

Figure 5.14

Also Ø 80 mm 90° and 45° elbows are available that reduce the total max. length of the ducts:

For a 45° elbow loss	0.9 m
For a 90° elbow loss	1.65 m

5.9 C_{63} exhaust-flue pipework

Exhaust flue pipework with flue-gas kit in smooth propylene or smooth stainless steel

Kits are available in Ø80 mm, Ø60 mm or Ø50 mm for expelling flue gases (a), while the air suction kits (b) are always Ø80 mm.

When setting up any ducted system, the hollow cavity between the secondary flue, exhaust flue or ducted pipe and the internal wall of the technical cabinet must only be used for this system exclusively.

All components must be made from materials with class A1 reaction to fire according to standard UNI EN 13501-1. **Note that extendible metal hoses must not be used.**

The flue must receive the flue gas output from the flue gas duct connected to the appliance only. Collective exhaust flues cannot be used and the output from extractor hoods above cooking appliances of any kind or output from other generators cannot be conveyed through the same flue or flue gas duct.

Therefore, if you install a ducted pipe for evacuating combustion products from any type of appliance inside an existing flue, this flue must then be used solely for the ducted pipe system. It cannot contain any other type of pipework (for example gas, heating or solar pipes), nor can it contain cables of any kind (electrical, TV antenna, etc.). However, if there is enough space, it can be used to install other ducted pipes hooked up to appliances powered by other fuels, as long as the minimum clearances required by the regulations are respected.

A condensate siphon must also be installed at the base of the flue-gas kit. This is because the boiler is not built to collect condensate from the system for evacuating combustion products.

	Twin C63		
	80+80 (a+b)	60+80 (a+b)	50+80 (a+b)
25 kW	40.0 m	37.1 m	26.5 m
35 kW	40.0 m	15.0 m	6.7 m

For every additional elbow, subtract 1.5 m from the total length.

For every tee connection, subtract 1.7 m from the total length.

For double-walled pipes in corrugated propylene or corrugated stainless steel, reduce the effective length by 15%.

The materials the pipes are made from must be suitable for use with this type of appliance.
The straight sections must not be deformed and must be suitably supported.
The joints must be sealed and protected against unthreading.
Insert the flue-gas draw stub kit above the boiler.

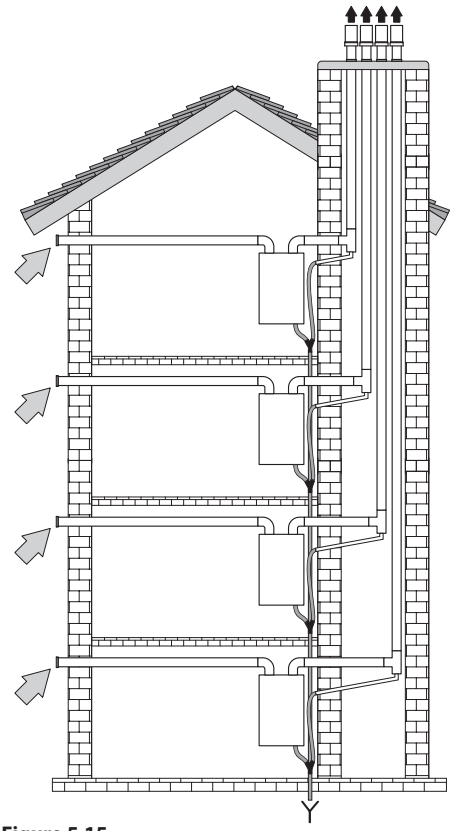

Figure 5.15

5.10 Positioning the draught terminals

The draught terminals must:

- be positioned on the outer perimeter walls of the building or on the roof;
- comply with the minimum distances Figure 5.16 and any national or local regulations.

	Position of the terminal	mm
A	Under the window or other opening	600
B	Next to a window or door	400
B	Next to an air vent or ventilation opening	600
C	Side of a balcony	1000
D	Under the gutter or discharge pipes	300
E	Under the eaves	300
F	Under balconies	300
G	Under the garage roof	**NO**
H	From vertical discharge pipes	300
I	From inner corners	300
J	From external corners	300
K	From the ground or other floor surfaces	2200
L	From a front facing surface without openings	2000
M	From a front facing opening	3000
N	From an opening in the garage	**NO**
O	Between two vertical terminals in the same wall	1500
P	Between two horizontal terminals in the same wall	1000
Q	Above the pitch of a roof with a slope less than or equal to 30° *	350
Q	Above the pitch of a roof with a slope greater than 30° *	600
R	Above a flat roof *	300
S	From a wall *	600
S	From two walls at an angle *	1000

* Roof-mounted terminal

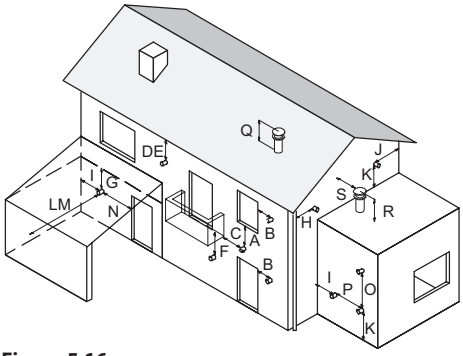

Figure 5.16

5.11 Electrical connections

• Unscrew the screws **L** (Figure 5.17) and remove the front panel **M** by pulling it towards you and then pushing it upwards in order to release it from the top fastenings Figure 5.18.

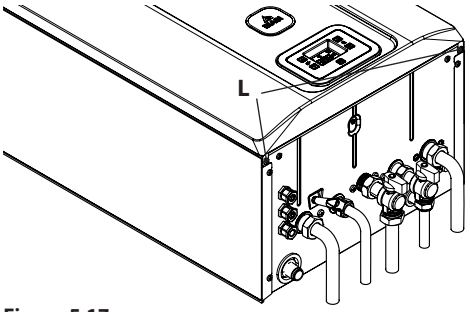

Figure 5.17

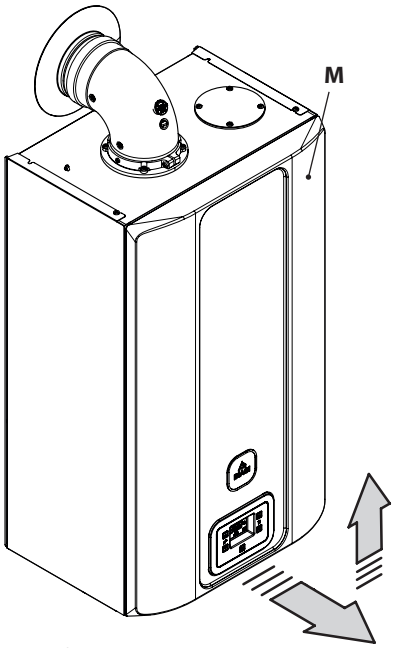

Figure 5.18

• Unscrew the screw **N** (Figure 5.19).

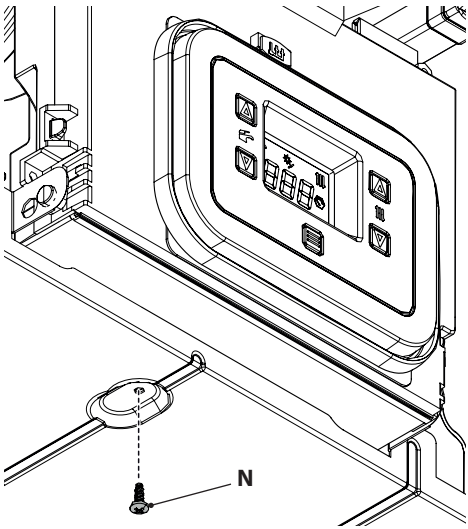

Figure 5.19

• Turn the control panel **O**, as shown in Figure

5.20.

- Unscrew the screw **P** and lift the cover **Q** to access the electric power supply terminal block, remote and external sensor (Figure 5.20).

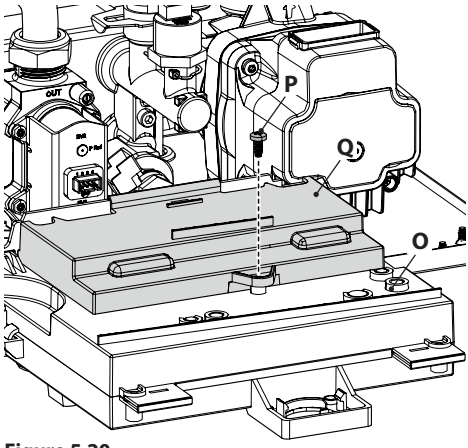

Figure 5.20

Connecting to the electric power supply grid

- Connect the electric power supply cable to the all-pole switch, respecting the correspondence of the power line (brown wire) and the neutral (blue wire) Figure 5.21.
- **Connect the earth wire (yellow/green) to an effective earthing system.**

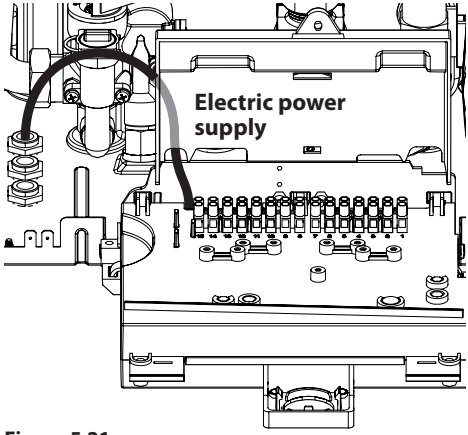

Figure 5.21

The earth wire must be longer than the electric power wires.

The electric power supply cable or wire for the unit (type: H03VV-F) must have a minimum cross section of 0.75 mm^2, be kept away from hot or sharp parts and comply with current technical standards.

Make the boiler cable exit using specific cable glands **R** (Figure 5.24).

5.12 Connecting a room thermostat or zone valves

Use the terminals indicated in Figure 5.22 to connect the ambient thermostat.

The installation of the ambient thermostat excludes the installation of the remote control. When connecting any type of room thermostat, the electric jumper between "A and B" must be removed.

The electrical conductors for the room thermostat must be inserted between terminals "A and B" as shown in Figure 5.22.

Do not connect live cables to the "A and B" terminals.

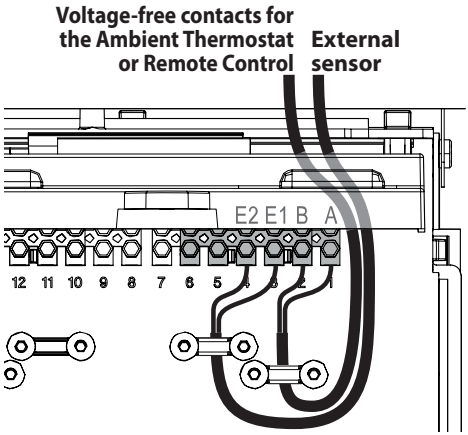

Figure 5.22

The thermostat must have class II insulation (⧈) or be correctly connected to the earth.

Make the boiler cable exit using specific cable glands **R** (Figure 5.24).

Connecting zone valves controlled by the room thermostat

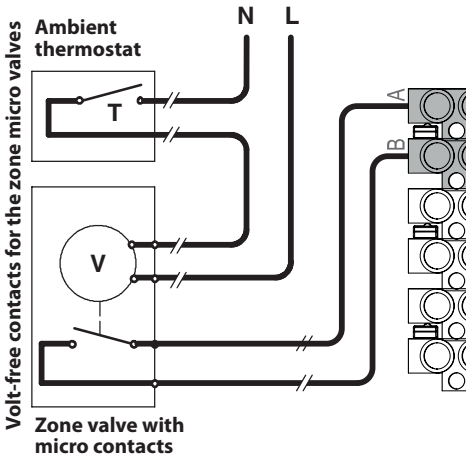

Figure 5.23

Use the room thermostat terminals indicated in Figure 5.22 to connect the zone valves. The electrical conductors of the zone valve micro contacts must be inserted into the "A and B" terminals of the room thermostat terminal board as shown in Figure 5.23.

The electric jumper between "A and B" must be removed.

Do not connect live cables to the "A and B" terminals.

The path of the ambient thermostat connection wires must follow the path indicated in Figure 5.22.
Make the boiler cables exit using specific cable glands **R** (Figure 5.24).

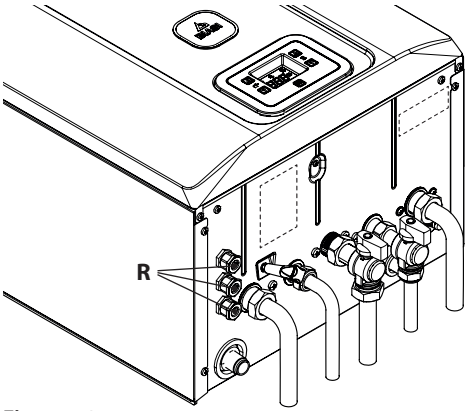

Figure 5.24

5.13 Installing the external temperature sensor (optional)

The external probe must be installed on an external wall of the building avoiding:
- Direct radiation of the sun's rays.
- Damp walls or walls where mould forms.
- Installation near fans, drain outlets or chimneys.

5.14 Electrical connection between the boiler and the external sensor

To connect the external sensor to the boiler,

use electric cables with a cross section of no less than 0.50 mm^2.

The electrical conductors for connecting the external sensor to the boiler must go through different channels to those for the mains voltage (230 V), as they are supplied at a safe low voltage and cannot exceed 20 metres in length.

Use the terminals indicated in Figure 5.22 to connect the external sensor.
The path of the external probe connection wires must follow the path indicated in Figure 5.22.
Make the boiler cables exit using specific cable glands **R** (Figure 5.24).

5.15 Selecting the type of external sensor

The boiler is set to operate without an external sensor.
If an external sensor (optional) **IS CONNECTED** to the boiler, the correct parameter must be set according to the type of probe installed.

Sequence for setting the type of external sensor

- Enter "programming mode" by pressing the 13 and 15 keys simultaneously for 5 seconds (Figure 5.25) until **HiS** (Boiler History) appears on the LCD display (Figure 5.26).

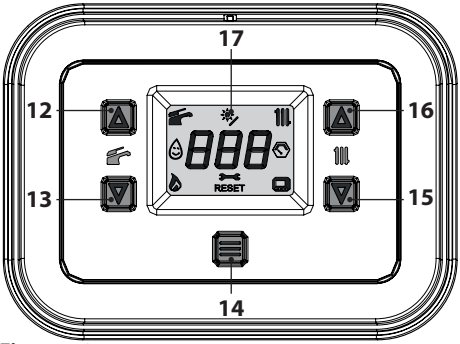

Figure 5.25



Figure 5.26

- Scroll through the various menus by pressing the keys 13 (back) or 15 (forward), until **PAr** (Parameters menu) appears on the LCD display (Figure 5.27).
- Press the 14 key for 1 second to enter the selected menu.



Figure 5.27

- Scroll through the various parameters by pressing the keys 13 (back) or 15 (forward), until **P57**, which alternates with the parameter value, appears on the LCD display (Figure 5.28).



Figure 5.28

- Press the 14 key for 1 second (Figure 5.25) to enter the selected parameter. The display will show the following (Figure 5.29).

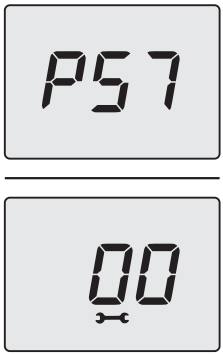

Figure 5.29

- Use keys 13 or 15 to modify the value of parameter 57 according to the type of probe installed (Figure 5.30).

PAR.	VALUE	DESCRIPTION
P57	00	Sensor not present (factory settings)
	01	External sensor with 12 kOhm NTC
	02	External sensor with 10 kOhm NTC

Figure 5.30

- Press button 14 (Figure 5.25) to confirm the value entered. The display will show the following (Figure 5.31) for 5 seconds, then move up to the next level.



Figure 5.31

- Press the keys 13 and 15 simultaneously (Figure 5.25) to exit the level without changing the value (return to the previous level).

To exit the parameters menu:
- wait 15 minutes without pressing any key;
- switch off the electric power supply;
- press the 13 and 15 keys simultaneously for 5 seconds (Figure 5.25) (return to previous level).

5.16 Electrical connection of the remote (optional)

Use the terminals indicated in Figure 5.22 to connect the remote.

To connect the remote control to the boiler, refer also to the REMOTE CONTROL manual.

The electric jumper between "A and B" must be removed.

The path of the remote control cable must follow the path indicated in Figure 5.22.

Make the boiler cables exit using specific cable glands **R** (Figure 5.24).

5.17 Enabling operation with the external sensor and setting the K coefficient

The boiler is set with a K coefficient equal to zero for boiler operation without the probe connected.
If the remote control **IS CONNECTED** to the boiler (optional), refer to Figure 5.32.
In this case, the K coefficient must be set remotely.

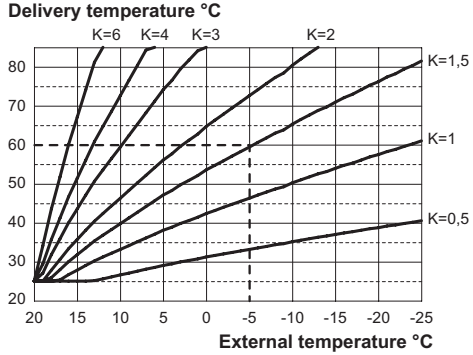

Figure 5.32

The K coefficient is a parameter that increases or decreases the boiler delivery temperature as the outdoor temperature varies.
When installing the external sensor, this parameter must be set based on the efficiency of the heating system to optimise the delivery temperature (Figure 5.32).

E.g. To achieve a heating system delivery temperature of 60°C with an outdoor temperature of -5°C, set a K of 1.5 (dashed line in Figure 5.32).

Sequence for setting the K coefficient

- Enter "programming mode" by pressing the 13 and 15 keys simultaneously for 5 seconds (Figure 5.33) until **HiS** (Boiler History) appears on the LCD display (Figure 5.34).

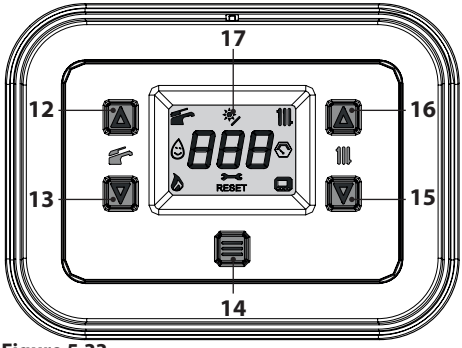

Figure 5.33



Figure 5.34

- Scroll through the various menus by pressing the keys 13 (back) or 15 (forward), until **PAr** (Parameters menu) appears on the LCD display (Figure 5.35).
- Press the 14 key for 1 second to enter the selected menu.



Figure 5.35

- Scroll through the various parameters by pressing the keys 13 (back) or 15 (forward), until **P14**, which alternates with the parameter value, appears on the LCD display (Figure 5.36).



Figure 5.36

- Press the 14 key for 1 second (Figure 5.33) to enter the selected parameter. The display will show the following (Figure 5.37).



Figure 5.37

- Pressing the 13 or 15 keys, it is possible to change the value of parameter 14 from a minimum of **00** to a maximum of **60** based

on the selected curve of the K coefficient in Figure 5.32 (the value shown on the display, in Figure 5.38, corresponds to **K = 1.5**).

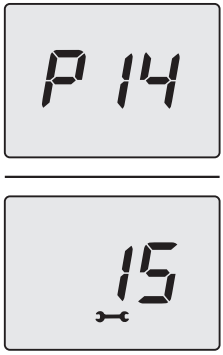

Figure 5.38

- Press button 14 (Figure 5.33) to confirm the value entered. The display will show the following (Figure 5.39) for 5 seconds, then move up to the next level.



Figure 5.39

- Press the keys 13 and 15 simultaneously (Figure 5.33) to exit the level without changing the value (return to the previous level).

To exit the parameters menu:
- wait 15 minutes without pressing any key;
- switch off the electric power supply;
- press the 13 and 15 keys simultaneously for 5 seconds (Figure 5.33) (return to previous level).

At this point the system delivery temperature will follow the trend in relation to the set K coefficient.
If the room temperature is not comfortable, you can increase or decrease the heating system delivery temperature by ± 15°C using the 15 (decrease) and 16 (increase) buttons (Figure 5.33).

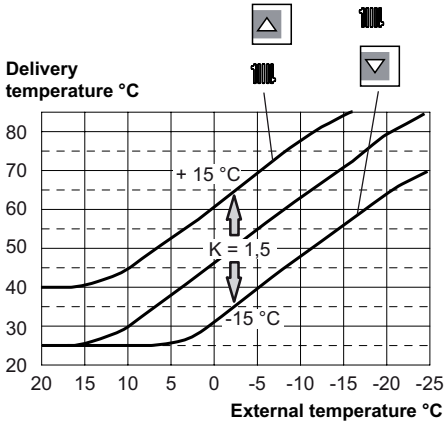

Figure 5.40

The temperature trend when changing the setting using keys 15 and 16 for a K 1.5 is shown in Figure 5.40.

Sequence for setting the K coefficient with the remote connected

Access REMOTE programming and the K coefficient setting can be selected.
- Power the boiler by turning on the two-way switch fitted during installation.
- Press button P for more than 3 seconds to enter INFO mode (Figure 5.41).

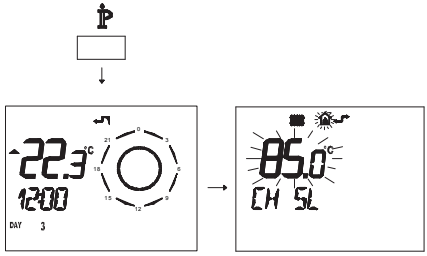

Figure 5.41

Press OK to display the K REG window (Figure 5.42).

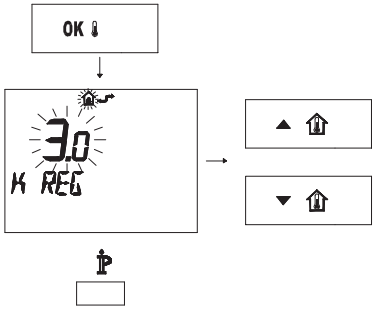

Figure 5.42

Use buttons ▲ and ▼ to change the value.
Press to exit *INFO* mode (Figure 5.42).

5.18 Setting pump post-circulation

The pump, in heating mode, is set for a post-circulation of about one minute at the end of each heat request.
This time can be changed from a minimum of 10 seconds to a maximum of 20 minutes in programming mode, using either the control panel or the remote.

- Enter "programming mode" by pressing the 13 and 15 keys simultaneously for 5 seconds (Figure 5.43) until **HiS** (Boiler History) appears on the LCD display (Figure 5.44).

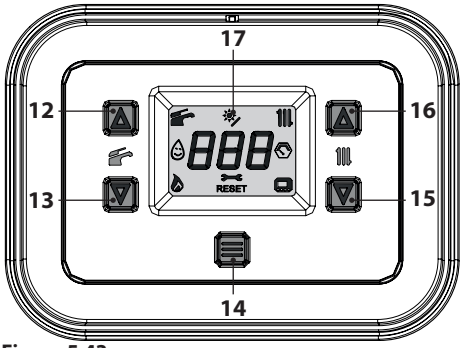

Figure 5.43



Figure 5.44

- Scroll through the various menus by pressing the keys 13 (back) or 15 (forward), until **PAr** (Parameters menu) appears on the LCD display (Figure 5.45).
- Press the 14 key for 1 second to enter the selected menu.



Figure 5.45

- Scroll through the various parameters by pressing the keys 13 (back) or 15 (forward), until **P12**, which alternates with the parameter value, appears on the LCD display (Figure 5.46).

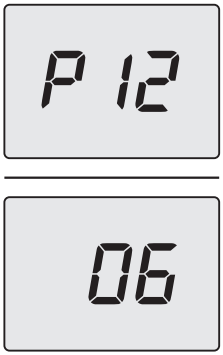

Figure 5.46

- Press the 14 key for 1 second (Figure 5.43) to enter the selected parameter. The display will show the following (Figure 5.47).

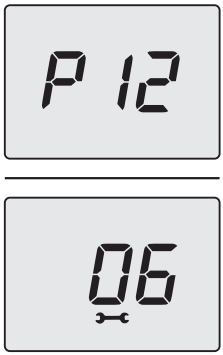

Figure 5.47

- It is possible to modify the value of parameter 12 from **01=**10s to **120=**1200s by pressing the 13 or 15 keys (each unit increase or decrease on the display corresponds to 10 seconds).
- Press button 14 (Figure 5.43) to confirm the value entered. The display will show the following (Figure 5.48) for 5 seconds, then move up to the next level.



Figure 5.48

- Press the keys 13 and 15 simultaneously (Figure 5.43) to exit the level without changing the value (return to the previous level).

To exit the parameters menu:
- wait 15 minutes without pressing any key;
- switch off the electric power supply;
- press the 13 and 15 keys simultaneously for 5 seconds (Figure 5.43) (return to previous level).

5.19 Selecting re-ignition frequency

When the boiler functions in normal on/off heating mode, the minimum time between two ignitions is set to 1 minute (re-ignition frequency).
This time can be changed from a minimum of 10 seconds to a maximum of 20 minutes in programming mode, using either the control panel or the remote.

- Enter "programming mode" by pressing the 13 and 15 keys simultaneously for 5 seconds (Figure 5.49) until **HiS** (Boiler History) appears on the LCD display (Figure 5.50).

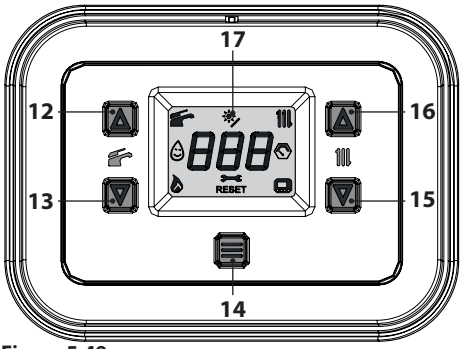

Figure 5.49



Figure 5.50

- Scroll through the various menus by pressing the keys 13 (back) or 15 (forward), until **PAr** (Parameters menu) appears on the LCD display (Figure 5.51).
- Press the 14 key for 1 second to enter the selected menu.



Figure 5.51

- Scroll through the various parameters by

pressing the keys 13 (back) or 15 (forward), until **P10**, which alternates with the parameter value, appears on the LCD display (Figure 5.52).

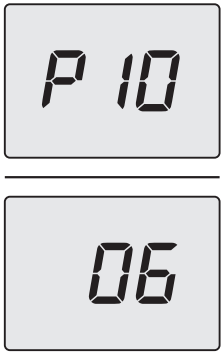

Figure 5.52

- Press the 14 key for 1 second (Figure 5.49) to enter the selected parameter. The display will show the following (6=60 seconds) (Figure 5.53).

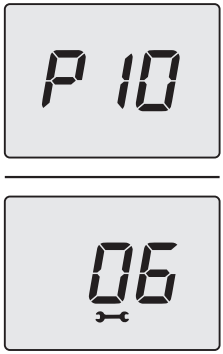

Figure 5.53

- Using keys 13 or 15, it is possible to modify the value of parameter 10 from **1=**10s to **120=**1200s (each unit on the display corresponds to an increase or decrease of 10 seconds).
- Press button 14 (Figure 5.49) to confirm the value entered. The display will show the following (Figure 5.54) for 5 seconds, then move up to the next level.



Figure 5.54

- Press the keys 13 and 15 simultaneously (Figure 5.43) to exit the level without changing the value (return to the previous level).

To exit the parameters menu:
- wait 15 minutes without pressing any key;
- switch off the electric power supply;
- press the 13 and 15 keys simultaneously for 5 seconds (Figure 5.49) (return to previous level).

5.20 Examples of hydraulic systems with hydraulic separator (optional)

The hydraulic separator creates a reduced load loss zone that makes the primary circuit and secondary circuit hydraulically independent.
In this case, the flow rate that passes through the circuits depends exclusively on the characteristics of the flow rate of the pumps.
Therefore by using a hydraulic separator, the secondary circuit's flow rate is circulated only when the relative pump is on.
When the pump for the secondary circuit is off, there is no circulation in the corresponding circuit and therefore the flow rate pushed by the pump in the primary circuit is by-passed through the separator.
Therefore, with a hydraulic separator it is possible to have a production circuit with a constant flow rate and a distribution circuit with a variable flow rate.

Examples of hydraulic systems

High temperature zone + low temperature zone.

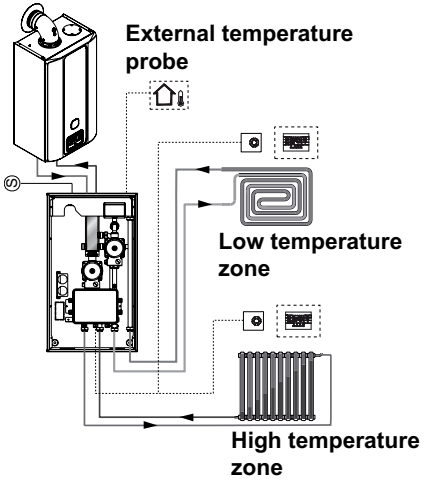

Figure 5.55

High temperature zone + 2 low temperature zones.

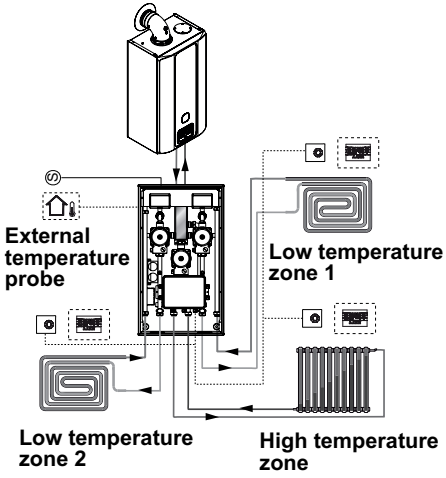

Figure 5.56

6 PREPARATION FOR SERVICE

6.1 Warnings

Before performing the operations described below, make sure that the installed two-way switch is in the off position.

6.2 Sequence of operations

Gas supply

- Open the cock for the gas meter and for the boiler 7 in Figure 6.1.

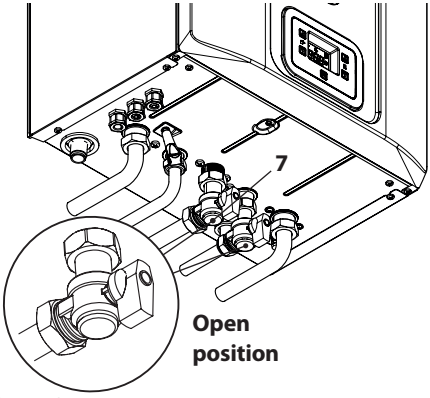

Figure 6.1

- Check for leaks in the gas fitting using a soapy solution or equivalent.
- Close the gas cock 7 in Figure 6.2.

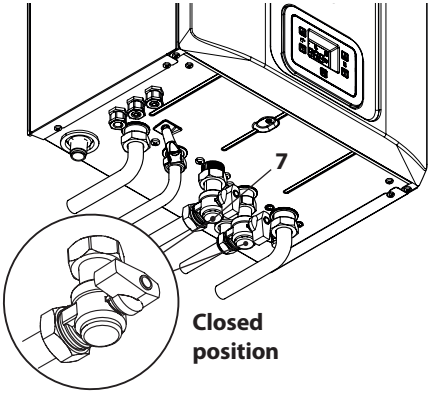

Figure 6.2

Filling the circuit

- Remove the front panel on the body, see section "Removing the body panels" on page 60.
- Open the installed water cocks.
- Open one or more hot water cocks to bleed the pipes.
- Loosen the automatic bleed valve cap 24 in Figure 6.3.

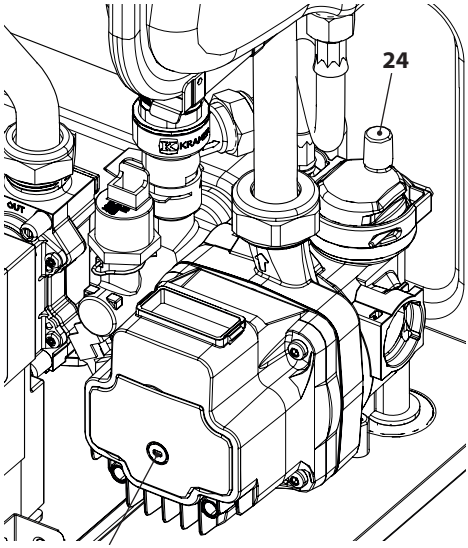

Figure 6.3

- Open the radiator cocks.
- Fill the heating circuit, see section "Filling the heating circuit" on page 16.
- Bleed the radiators and the various high points of the installation, then close any manual bleeding devices again.
- Remove the cap 26 in Figure 6.3 and release the pump by turning the impeller using a screwdriver.
  Bleed the pump during this operation.
- Close the pump cap.
- Finish filling the heating system.
  The installation as well as the pump must be bled multiple times.

Fill the condensate discharge siphon with a half litre of water to prevent smoke from exiting at first ignition.
The flue gas intake positioned on the flue gas outlet can be used for this operation (Figure 6.4).

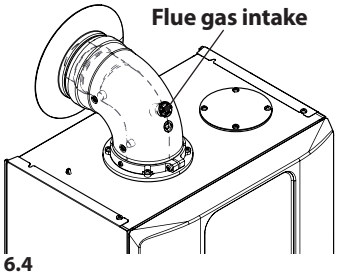

Figure 6.4

- Assemble the front panel of the body.
- Power the boiler by turning on the two-way switch fitted during installation. The LCD display shows the symbol - - - (the dashes light up in sequence to simulate a scrolling motion) (Figure 6.5).

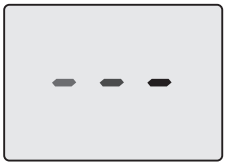

Figure 6.5

- Press button 14 for 5 seconds until both symbols and appear on the display (Figure 6.6).

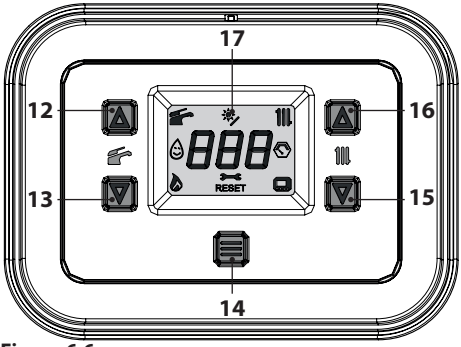

Figure 6.6

The LCD display shows the boiler temperature (primary circuit) and the symbols and (Figure 6.7).

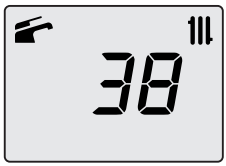

Figure 6.7

- Open the gas cock.
- Make sure that the ambient thermostat is in the "heat request" position.
- Check the correct operation of the boiler, both in DHW mode and in heating mode.
- Check the gas pressures and flow rates as shown in section "CHECKING THE GAS SETTING" on page 54 of this manual.
- Check that the condensate produced during operation fills the siphon and is drained correctly in the system discharge pipe.
- Turn off the boiler by pressing button 14 (Figure 6.6) for 5 seconds until the symbol - - - appears on the display (the dashes light up in sequence to simulate a scrolling motion) (Figure 6.5).

- Show the user how to use the appliance correctly and also explain:
  - ignition;
  - shut off;
  - making adjustments.

The user is responsible for keeping the documentation together and intact, and within reach for consultation.

7 CHECKING THE GAS SETTING

7.1 Warnings

Each time after measuring the gas pressure, fully close all tapping points that were used.
After each gas adjustment, the valve adjustment components must be sealed.

Warning: risk of electrocution.
The boiler is live during the operations described in this section.
Never touch any electrical parts.

7.2 Gas operations and setting

- Remove the front panel on the boiler body, see section "Removing the body panels" on page 60.

Checking the network pressure

- With the boiler turned off (out of service), check the supply pressure using the tapping point 27 in Figure 7.1 and compare the value read with those shown in the Gas supply pressure table in section "Technical data M300V.2025 SM" on page 26 and "Technical data M300V.3035 SM" page 29.
- Fully close the tapping point 27 in Figure 7.1.

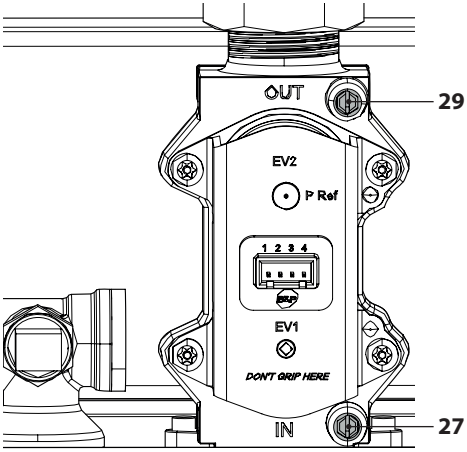

Figure 7.1

Check minimum burner pressure

- Connect a flue analyser to the flue gas analysis outlets on the flue gas exhaust on the boiler Figure 7.2.

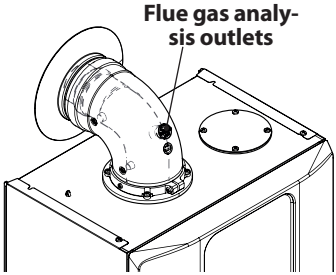

Figure 7.2

- Make sure that the room thermostat is in the "heat request" position.
- Draw off an abundant amount of DHW by opening the taps.

- Enter "programming mode" by pressing the 13 and 15 keys simultaneously for 5 seconds (Figure 7.3) until **HiS** (Boiler History) appears on the LCD display (Figure 7.4).

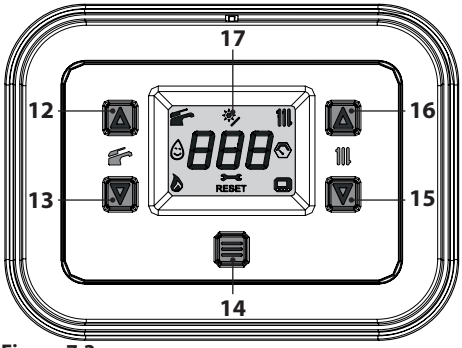

Figure 7.3



Figure 7.4

- Scroll through the various menus by press-

ing the keys 13 (back) or 15 (forward), until **Ch5** (Chimney sweep) appears on the LCD display (Figure 7.5).
- Press the 14 key for 1 second to enter the selected menu.



Figure 7.5

- The letters **LP**, alternating with the minimum heating water temperature (e.g.**45**), appear on the screen indicating the activation of the "chimney sweep function" at minimum power (Figure 7.6).

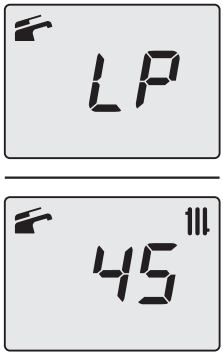

Figure 7.6

- Compare the value of **CO_2** read on the flue gas analyser with the one in the "Data in DHW mode" table and the values of **CO_2 at Q.min.** section "Technical data M300V.2025 SM" on page 26 and "Technical data M300V.3035 SM" page 29.

Check maximum burner pressure
- Press button 15 3 times until the LCD display indicates the letters **dP** (chimney sweep active in maximum DHW mode) that alternate with the value of the heating water temperature (e.g.**60**), indicating the activation of the "chimney sweep function" at maximum output in DHW mode (Figure 7.7).

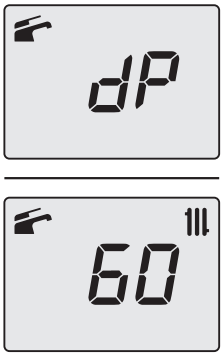

Figure 7.7

- Compare the value of **CO_2** read on the flue gas analyser with the **CO_2** value **at Q.nom** in DHW mode as stated in section "Technical data M300V.2025 SM" on page 26 and "Technical data M300V.3035 SM" page 29.

If the two values do not coincide with the value shown in section "Technical data M300V.2025 SM" on page 26 and "Technical data M300V.3035 SM" page 29, exit programming mode by pressing the 14 key for 5 seconds and carry out the "Automatic calibration of the gas valve" page 55.

7.3 Automatic calibration of the gas valve

When replacing the panel board, the fan or gas valve, or parameter **P01** on the control board is changed, the gas valve must be calibrated in order to carry out **CO_2** calibration at maximum boiler output.

- Connect a flue analyser to the flue gas analysis outlets on the flue gas exhaust on the boiler Figure 7.2.
- Make sure that the room thermostat is in the "heat request" position.
- Draw off an abundant amount of DHW by opening the taps.
- Enter "programming mode" by pressing the 13 and 15 keys simultaneously for 5 seconds

(Figure 7.8) until **HiS** (Boiler History) appears on the LCD display (Figure 7.9).

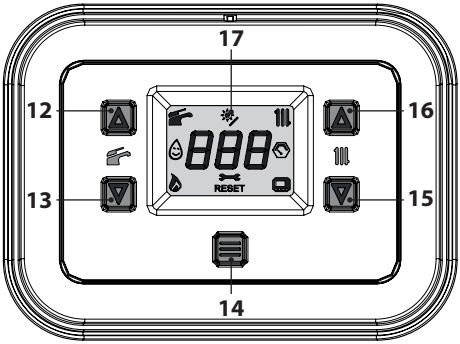

Figure 7.8



Figure 7.9

- Scroll through the various menus by pressing the keys 13 (back) or 15 (forward), until **CAF** appears on the LCD display (Figure 7.10).



Figure 7.10

- Press the 14 key (Figure 7.8) until the **StF** (Start Full), alternating with **34** (calibration value), appears on the LCD display (Figure 7.11).



Figure 7.11

- Allow the program to perform the entire process, at the end of which **FuF** (Full Finish) will be displayed (Figure 7.12).

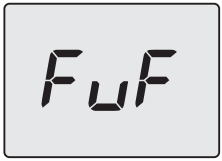

Figure 7.12

To exit the parameters menu:
- wait 15 minutes without pressing any key;
- switch off the electric power supply;
- press the 13 and 15 keys simultaneously for 5 seconds (Figure 7.8) (return to previous level).

- Check the precise gas calibration of the boiler, referring to section "Gas operations and setting" on page 54.

8 GAS CONVERSION

8.1 Warnings

The operations to adapt the boiler to the type of gas available must be carried out by an authorised service centre.

8.2 Gas operations and setting

The boiler is factory set to operate with natural gas (G20).

To set boiler operation to **LPG gas (G31)**, carry out the following settings:

- Enter "programming mode" by pressing the 13 and 15 keys simultaneously for 5 seconds (Figure 8.1) until **HiS** (Boiler History) appears on the LCD display (Figure 8.2).

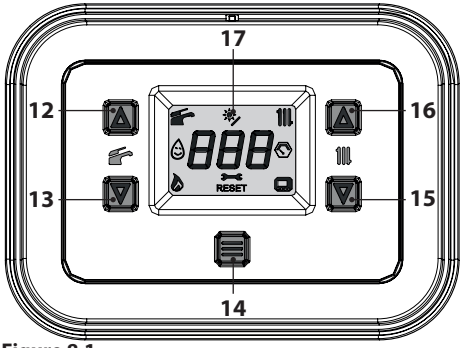

Figure 8.1



Figure 8.2

- Scroll through the various menus by pressing the keys 13 (back) or 15 (forward), until **PAr** (Parameters menu) appears on the LCD display (Figure 8.3).
- Press the 14 key for 1 second to enter the selected menu.



Figure 8.3

- Scroll through the various parameters by pressing the keys 13 (back) or 15 (forward), until **P02** (Gas type selection), which alternates with the parameter value, appears on the LCD display (Figure 8.4).

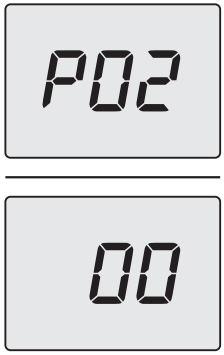

Figure 8.4

- Press the 14 key for 1 second (Figure 8.1) to enter the selected parameter. The display will show the following (Figure 8.5).

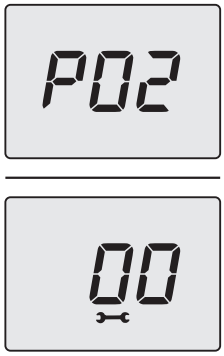

Figure 8.5

- The value of parameter 02 can be changed from **00=G20** to **01=G31**, which is compatible with LPG, using the 13 or 15 keys (Figure

8.6).

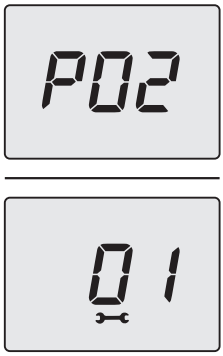

Figure 8.6

- Press button 14 (Figure 8.1) to confirm the value entered. The display will show the following (Figure 8.7) for 5 seconds, then move up to the next level.



Figure 8.7

- By pressing the keys 13 and 15 simultaneously (Figure 8.1) exits the level without changing the value (return to the previous level Figure 8.4).

- Scroll through the various menus by pressing the keys 13 (back) or 15 (forward), until **CAF** appears on the LCD display (Figure 8.8).



Figure 8.8

For calibration, see section "Automatic calibration of the gas valve" on page 55.
To exit the parameters menu:
- wait 15 minutes without pressing any key;
- switch off the electric power supply;
- press the 13 and 15 keys simultaneously for 5 seconds (Figure 8.1) (return to previous level).

- Apply the label indicating the type of gas and the pressure value for which the unit is set. The self-adhesive label is contained in the documentation envelope attached to the boiler.

9 MAINTENANCE

9.1 Warnings



Protective gloves must be worn.



Cool down the appliance by shutting off the gas cock and withdrawing a large quantity of water by opening the system's DHW cocks.

The operations described in this section must only be performed by professionally qualified personnel, therefore you are advised to contact an authorised service centre.

For efficient and continuous boiler operation, the user must have maintenance and cleaning carried out once a year by an authorised service centre technician. If these operations are not carried out, damage to components and boiler operation problems will not be covered by the standard warranty.

Before performing any cleaning or maintenance operation or before opening or removing the boiler panels, **isolate the unit from the electric power supply** using the two-way switch installed in the system and **close the gas cock**.

9.2 Programming the maintenance period

- Enter "programming mode" by pressing the 13 and 15 keys simultaneously for 5 seconds (Figure 9.1) until **HiS** (Boiler History) appears on the LCD display (Figure 9.2).

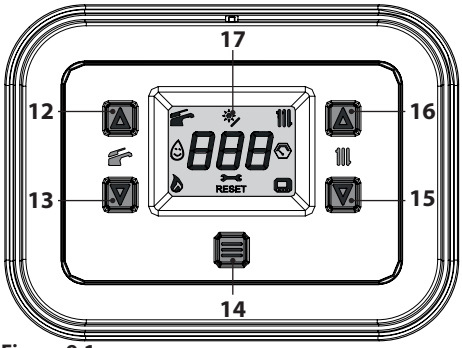

Figure 9.1



Figure 9.2

- Scroll through the various menus by pressing the keys 13 (back) or 15 (forward), until **PAr** (Parameters menu) appears on the LCD display (Figure 9.3).
- Press the 14 key for 1 second to enter the selected menu.



Figure 9.3

- Scroll through the various parameters by pressing the keys 13 (back) or 15 (forward), until **P34**, which alternates with the parameter value, appears on the LCD display (Figure 9.4).



Figure 9.4

- Press the 14 key for 1 second (Figure 5.49) to enter the selected parameter. The display will show the following (Figure 9.5).



Figure 9.5

- The value of parameter 34 can be changed from **00** to **48** months, using the 13 or 15 keys. It is possible to set parameter 35 to **99** thereby disabling the maintenance request (symbol will disappear from the display).
- Press button 14 (Figure 9.1) to confirm the value entered. The display will show the following (Figure 9.6) for 5 seconds, then move up to the next level.



Figure 9.6

To exit the parameters menu:
- wait 15 minutes without pressing any key;
- switch off the electric power supply;
- press the 13 and 15 keys simultaneously for 5 seconds (Figure 9.1) (return to previous level).

9.3 Removing the body panels

Front panel

- Unscrew the screws **A** and remove the front panel **D** by pulling it towards you and then pushing it upwards in order to free it from the upper seats (Figure 9.7 and Figure 9.8).

Side panels

Loosen the screws **B**, **C**, **G** and **H** in Figure 9.7 and remove the two side panels **E** and **F** push them outwards.

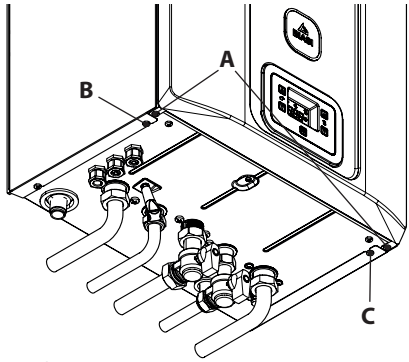

Figure 9.7

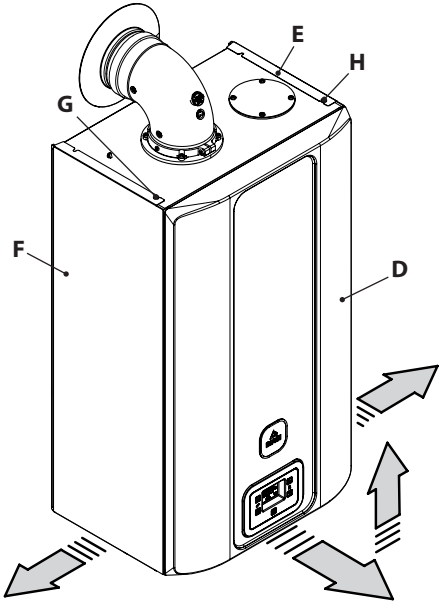

Figure 9.8

Control panel

Remove screws **I** and turn the control panel **J**, as shown in figure Figure 9.9, for optimal access to the internal components of the boiler.

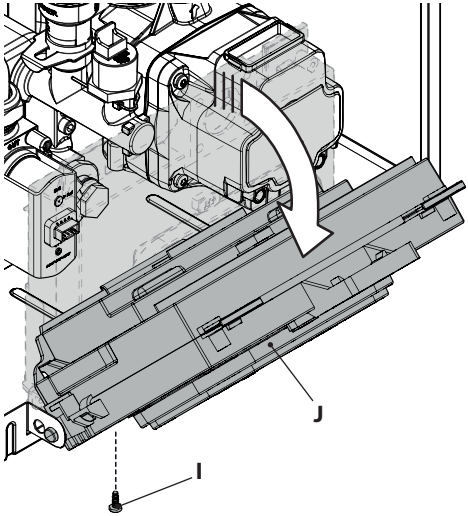

Figure 9.9

9.4 Reinstalling the body panels

Side panels

Reinstall the side panels **E** and **F** following the operations described in section "Removing the body panels" on page 60 in reverse order.

Front panel

Reinstall the front panels **D** working in the reverse order to that described in section "Removing the body panels" on page 60.

9.5 Emptying the DHW circuit

- Close the installed DHW inlet cocks .
- Open the system's DHW cocks.

9.6 Emptying the heating circuit

- Close the installed heating system delivery and return cocks.
- Loosen the heating circuit drain cock 11 indicated in Figure 9.10.

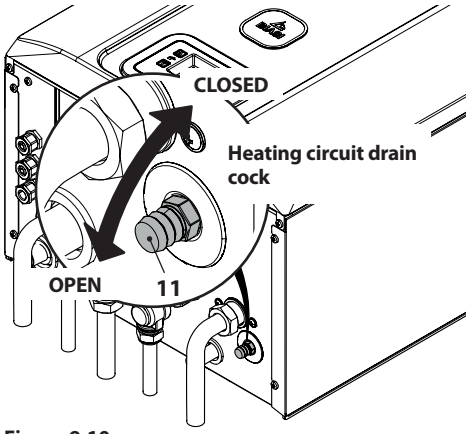

Figure 9.10

- To make draining easier, unscrew the automatic bleed valve cap 24 in Figure 9.11.

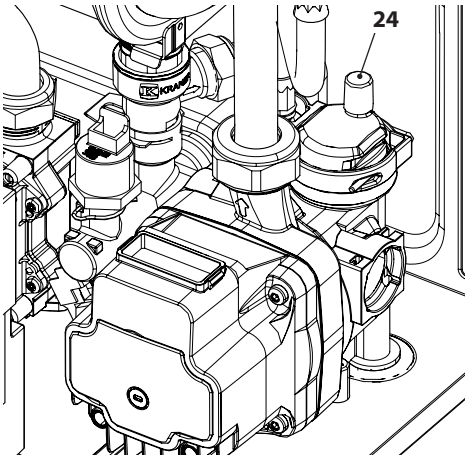

Figure 9.11

9.7 Cleaning the primary condensate exchanger and the burner

Removing the burner fan unit 38 in Figure 9.12.

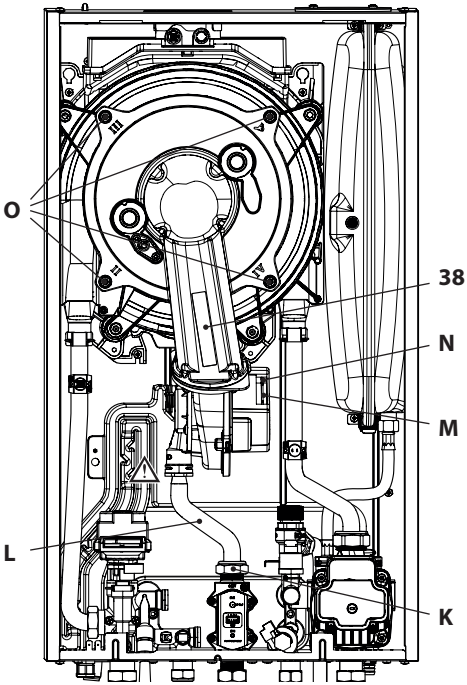

Figure 9.12

- Remove the front panel of the body and turn the control panel (see "Removing the body panels" on page 60).
- Disconnect the wiring of the ignition and detection electrodes.
- Unscrew the gas swivel joint **K** and remove the pipe **L**.
- Disconnect the connector **M** by pulling it downwards (Figure 9.12).
- Disconnect the fan connector **N** by pulling it downwards (Figure 9.12).
- Loosen the nuts **O** and remove the fan burner unit 38 (Figure 9.12)
- Extract the burner casing by pulling it outwards.
- The silicon gasket on the front panel of the combustion chamber Figure 9.13 must be changed if it becomes worn.

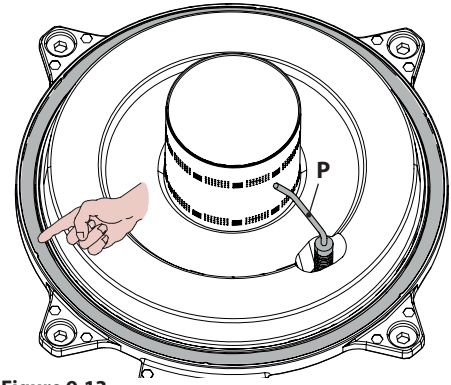

Figure 9.13

- The ignition/detection electrode **P** in Figure 9.13 also serves as a sensor for correctly draining the condensate.
- If this electrode comes into contact with the condensate water in the combustion chamber, the boiler goes into safety lockout. Replace the insulation where wet or worn.

Remove any build-up from the ignition/detection electrode, or replace it if worn/damaged. In any case, it must be replaced every 2 years.

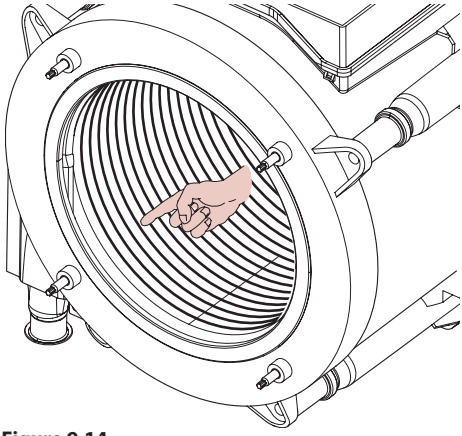

Figure 9.14

If there is any dirt on parts of the primary condensate exchanger (which can be seen after removing the burner casing), brush them with a bristle brush and then remove the dirt using a vacuum cleaner.

The burner does not require particular maintenance, simply dust it off using a bristle brush.
More specific maintenance will be assessed and performed by a technician from an Authorised Service Centre.

For reassembly, repeat the operations but in reverse order, being careful not to damage the gas pipe OR gasket when the pipe is inserted in the gas/air diaphragm. Carry out the gas tightness test after tightening the gas pipe swivel joint.

9.8 Check the pressure in the heating expansion tank

Empty the heating circuit as described in section "Emptying the heating circuit" on page 61 and check that the expansion tank pressure is not less than 1 bar.
If the pressure is lower, correct the pressure.

9.9 Cleaning the domestic hot water exchanger

Descaling the domestic hot water exchanger will be assessed by a technician from an Authorised Service Centre, who will perform the cleaning using specific products.

9.10 Checking the flue gas expulsion duct

Have a technician from an authorised service centre periodically check the condition of the flue gas exhaust duct, the air duct and the efficiency of the flue gas safety circuit (at least once a year).

9.11 Checking boiler efficiency

Carry out performance checks at the intervals anticipated by the regulations in force.

- Connect a flue analyser to the flue gas analysis outlets on the flue gas exhaust on the boiler Figure 9.15.

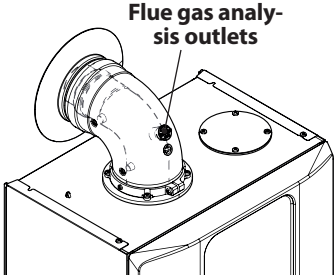

Figure 9.15

- Make sure that the room thermostat is in the “heat request” position.
- Draw off an abundant amount of DHW by opening the taps.
- Activate the "chimney sweep function" at maximum output in heating mode (see "Setting the boiler's chimney sweep function" on page 64)
- Check the boiler combustion using the outlets located on the flue pipes (Figure 9.15) and compare the data measured with the

following.

Model M300V.2025 SM		
Nominal heat input	kW	21,0
Nominal efficiency	%	98,4
Combustion efficiency	%	98,7
Air index	n	1,3
Composition of CO2 fumes	%	8,5 - 9,5
Composition of O2 fumes	%	4,8
Composition of CO fumes	ppm	220
Flue gas temperature	°C	78

Values refer to tests with 80 mm 1 + 1 m twin pipe discharge and Methane gas G20 and with heating delivery/return temperature of 60°/80°C

Figure 9.16

Model M300V.3035 SM		
Nominal heat input	kW	31,0
Nominal efficiency	%	98,8
Combustion efficiency	%	99,0
Air index	n	1,7
Composition of CO2 fumes	%	8,5 - 9,5
Composition of O2 fumes	%	4,8
Composition of CO fumes	ppm	200
Flue gas temperature	°C	78

Values refer to tests with 80 mm 1 + 1 m twin pipe discharge and Methane gas G20 and with heating delivery/return temperature of 60°/80°C

Figure 9.17

9.12 Checking the condensate discharge siphon

The condensate discharge siphon 32 (Figure 9.18) does not require particular maintenance. Simply check:

- that solid deposits have not formed and remove them if necessary.
- that the condensate outlet pipes are not obstructed.

To clean the inside of the siphon, simply remove it and turn it upside down so that any impurities can be extracted.

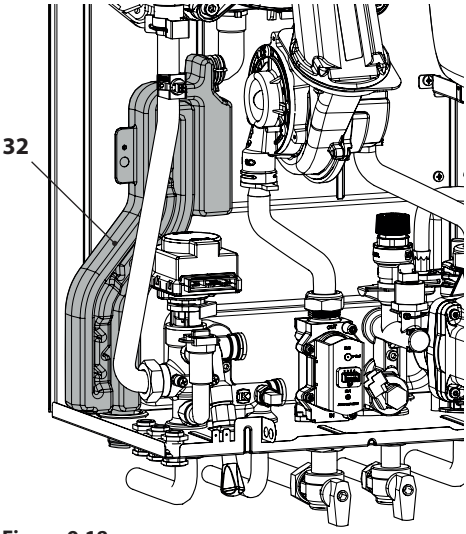

Figure 9.18

9.13 Setting the boiler's chimney sweep function

With the boiler set to chimney sweep mode, some automatic boiler functions can be disabled, which makes checking and monitoring operations easier.

- Enter "programming mode" by pressing the 13 and 15 keys simultaneously for 5 seconds (Figure 9.19) until **HiS** (Boiler History) appears on the LCD display (Figure 9.20).

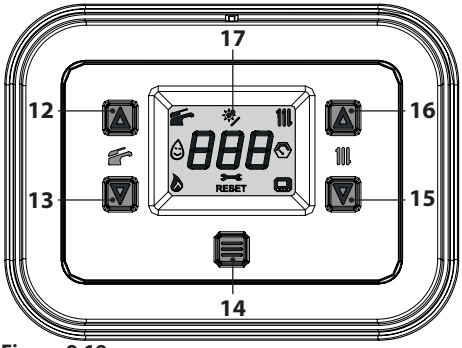

Figure 9.19



Figure 9.20

- Scroll through the various menus by pressing the keys 13 (back) or 15 (forward), until **ChS** (Chimney sweep) appears on the LCD display (Figure 9.21).
- Press the 14 key for 1 second to enter the selected menu.



Figure 9.21

Chimney sweep function at minimum output in domestic hot water mode

- Scroll through the various parameters by pressing the keys 13 (back) or 15 (forward) until **LP**, which alternates with the minimum heating water temperature (e.g.**45**), appears on the LCD display indicating the activation of the "chimney sweep function" at minimum power (Figure 9.22).

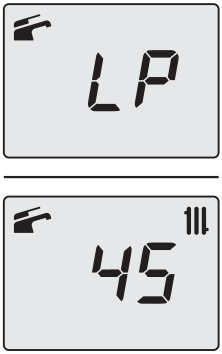

Figure 9.22

Chimney sweep function at minimum output in heating mode

- Press button 15 (Figure 9.19) to vary the output in chimney sweep mode: when the LCD displays the letters **hP** that alternate with the temperature of the heating water (e.g. **32**), the "chimney sweep function" is at maximum output in heating mode (Figure 9.23).

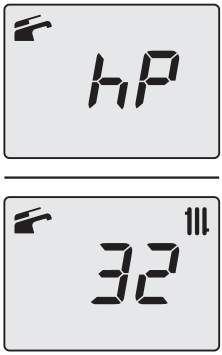

Figure 9.23

Chimney sweep function at maximum output in heating mode

- Press button 15 (Figure 9.19) to vary the output in chimney sweep mode: when the LCD displays the letters **cP** that alternate with the temperature of the heating water (e.g. **60**), the "chimney sweep function" is at maximum output in heating mode (Figure 9.24).

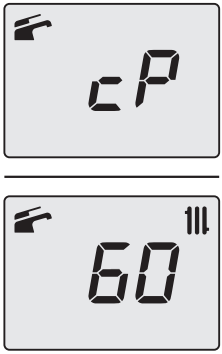

Figure 9.24

Chimney sweep function at maximum output in domestic hot water mode

- Press button 15 (Figure 9.19) again to vary the output in chimney sweep mode: when the LCD displays the letters **dP** that alternate with the temperature of the heating water (e.g. **60**), the "chimney sweep function" is at maximum output in domestic hot water mode (Figure 9.25);

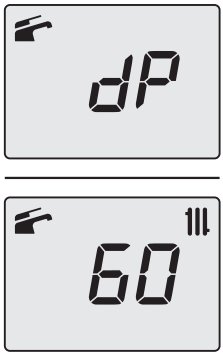

Figure 9.25

- Press keys 13 and 15 simultaneously (Figure 9.19) for 1 second to exit "chimney sweep mode" and return to the menu list.

To exit the parameters menu:
- wait 15 minutes without pressing any key;
- switch off the electric power supply;
- press the 13 and 15 keys simultaneously for 5 seconds (Figure 9.19) (return to previous level).

9.14 Settings for changing the control board

When the control board is replaced, it must be configured for the exact boiler type.

Important: In order to check boiler operation and any change to factory-set parameters, the table in Figure 9.26 must be completed with the values that are displayed when scrolling through the control board configuration parameters.

This makes it possible to correctly adjust the boiler if the control board is replaced.

PARAMETERS	LCD	VALUE
Boiler model/type	**P01**	
Type of gas	**P02**	
User interface	**P03**	
Type of domestic hot water exchanger	**P04**	
Type of primary circuit control device	**P05**	
Type of DHW flow control device	**P06**	
Maximum Temperature heating delivery (°C)	**P07**	
Minimum heating delivery temperature (°C)	**P08**	
Maximum heating output (%)	**P09**	
Re-ignition frequency in heating mode (*10 sec.)	**P10**	
Adjusting the minimum pump speed (%)	**P11**	
Pump post-circulation	**P12**	
Pump mode operation	**P13**	
Value of the external sensor K	**P14**	
Correct heating system pressure (*10 bar)	**P15**	
Maximum heating system pressure limit	**P16**	
ΔT heating delivery/return due to reduction of pump speed	**P17**	
Adjusting maximum domestic hot water temperature	**P18**	
Adjusting minimum temperature of domestic hot water	**P19**	

PARAMETERS	LCD	VALUE
Minimum closing flow rate of the DHW flow switch (ON)	**P20**	
Minimum opening flow rate of the DHW flow switch (OFF)	**P21**	
Ignition delay in DHW mode	**P22**	
Burner shut-off as a function of DHW temperature	**P23**	
Burner ignition as a function of DHW temperature	**P24**	
DHW pre-heating mode	**P25**	
DHW post-heating mode (at end of DHW) (**01**=M300V.2025, **02**=M300V.3035 SM)	**P26**	
Adjusting output power in DHW mode (%)	**P27**	
Adjusting maximum DHW temperature in anti-legionella function (°C) (only for boilers with a sensor)	**P28**	
Anti-legionella function activation frequency (days)	**P29**	
Reset (restores factory settings)	**P30**	
Chimney sweep	**P31**	
Adjusting the minimum power in DHW mode (%)	**P32**	
Regulation of the minimum power in heating mode (%)	**P33**	
Maintenance intervals (months)	**P34**	
Antifreeze activation temperature	**P35**	
Antifreeze deactivation temperature	**P36**	

PARAMETERS	LCD	VALUE
Antifreeze activation temperature with external sensor	**P37**	
External relay operating mode 1 (**0**=OFF, **1**=Zone by remote, **2**=Alarm)	**P38**	
External relay operating mode 2 (**0**=OFF / TA2=OFF, **1**=Zone heat. 2 / TA2 active, **2**= EVG ext / TA2 Active, **3**= Anomaly / TA2 Active, **4** =Remote filling / TA2 active)	**P39**	
Size shown on the display during operation (**0**=T.CH or T.DHW, **1**=onlyT.CH, **2**=only T.DHW, **3**=CH pressure, **4**=T.ext)	**P40**	
Messages display (**0**all, **1**=boiler status and errors, **2**=boiler status only)	**P41**	
Not used	**P42**	------
Not used	**P43**	------
Not used	**P44**	------
Not used	**P45**	------
Not used	**P46**	------
Not used	**P47**	------
Not used	**P48**	------
Not used	**P49**	------
Not used	**P50**	------
Not used	**P51**	------
Chimney diaphragm	**P52**	
Fan speed at maximum	**P53**	
Fan speed at minimum	**P54**	
Ignition power	**P55**	
Gas valve management	**P56**	
Type of external sensor	**P57**	

Figure 9.26

- Enter "programming mode" by pressing the 13 and 15 keys simultaneously for 5 seconds (Figure 9.27) until **HiS** (Boiler History) appears on the LCD display (Figure 9.28).

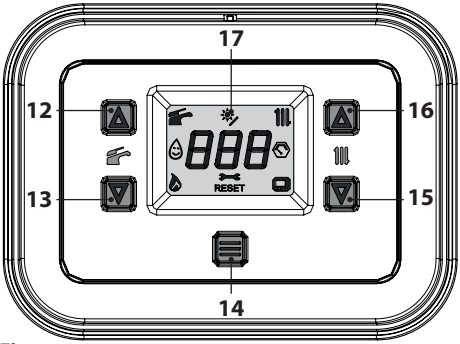

Figure 9.27



Figure 9.28

- Scroll through the various menus by pressing the keys 13 (back) or 15 (forward), until **PAr** (Parameters menu) appears on the LCD display (Figure 9.29).



Figure 9.29

- Press the 14 key for 1 second to enter the selected menu.

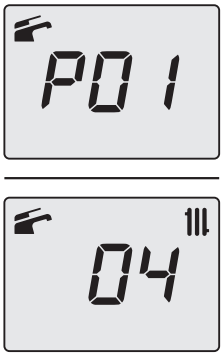

Figure 9.30

- Press the 14 key for 1 second (Figure 9.27) to enter the selected parameter. The display will show the following (**13**=M300V.2025 SM or **15**=M300V.3035 SM) (Figure 9.31).

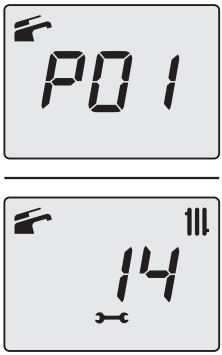

Figure 9.31

- By pressing the keys 13 and 15 simultaneously (Figure 9.27) exits the level without changing the value (return to the previous level Figure 9.30).
- Scroll through the various parameters by pressing the keys 13 (back) or 15 (forward), until **P02**, which alternates with the parameter value, appears on the LCD display.
- Repeat the previous steps to display the value and proceed to the next parameter.
- Set the following parameters:

PARAMETERS	LCD	VALUE
Type of gas	**P02**	G20 = 00
		G31 = 01
User interface	**P03**	00
Type of domestic hot water exchanger	**P04**	00
Type of primary circuit control device	**P05**	03
Type of DHW flow control device	**P06**	03
DHW post-heating mode (at end of DHW) (M300V.2025 SM)	**P25**	01
DHW post-heating mode (at end of DHW) (M300V.3035 SM)		02

To exit the parameters menu:
- wait 15 minutes without pressing any key;
- switch off the electric power supply;
- press the 13 and 15 keys simultaneously for 5 seconds (Figure 9.27) (return to previous level).

Enter the **CAF** menu (Automatic calibration) and start calibration. See paragraph "Automatic calibration of the gas valve" on page 55.

10 BOILER DISPOSAL AND RECYCLING

The boiler and any accessories must be disposed of correctly, recycling the different materials where possible.
The installer must dispose of the packaging used to transport the boiler.

Please observe the regulations currently in force regarding recycling and disposing of the boiler and any accessories.
For electronic appliances specifically, please see Directive 2012/19/EU and ANNEX IX of the Italian Decree transposing this Directive, DL49/14.



17962.0880.0 2621 72A5 EN

BSG Caldaie a Gas S.p.a.
Registered office, sales and administrative headquarters, plant and technical support
33170 PORDENONE (Italy) – Via Pravolton, 1/b

☎ +39 0434.238311

+39 0434.238312

www.biasi.it

Sales headquarters

+39 0434.238400

Technical support

+39 0434.238387

This manual replaces previous versions.
In order to constantly improve its products, BSG Caldaie a Gas S.p.A. reserves the right to change the data provided in this manual at any time and without notice. Product warranty pursuant to Leg. Decree. no. 24/2002